Structure of the tagging system

Structure of the component tagging

XXX — XXX — XX

Main equipment area code — Equipment Valve Instrument abbreviation — Numeric Sequence

Example
552 - TA - 01

- 01
- Tank
- Area pasteurization tank 2

Anläggningsdel	Engelsk benämning	Familjenummer	Komponentnummer
Mottagning	**Reception**	**100-199**	
Gödselbrunn	Manure tank		100-109
Fettank/tank för flytande substrat	Fat/Liquid Substrate tank		110-119
Fastinmatningsenhet	Dry Dosificator tank		120-129
FeCl-tank	FeCl tank		130-139
Glyceroltank	Glycerol tank		140-149
Spannmålssilo	Cereals silo		160-169
Vattentank	Water tank		170-179
Gasoltank	LPG tank		180-189
Betor och rotfrukter	Beets and root crops		190-191
Inmatning	**Feeding in**	**200-299**	
Gödselinmatning	Manure feeding		200-209
Fett-/flytande substratinmatning	Fat/Liquid Substrate feeding		210-219
Fastinmatning	Dry Dosificator		220-229
FeCL-inmatning	FeCl feeding		230-239
Glycerolinmatning	Glycerol feeding		240-249
Hygienisering på inmatningen	Pasteurization before digester		250
Spannmålsinmatning	Cereal feeding		260
Vatteninmatning	Water feeding		270
Syrgas/luft-dosering	Oxygen/air dozing		280
Blandningstank för inmatning	Mixing tank		290
rötkammare	**Digester**	**300-399**	
Rötkammare 1	Digester 1		301
Rötkammare 2	Digester 2		302
Rötkammare med "parallella linjer"	Linje X		3X0
Värmesystem	**Heating system**	**400-499**	
Värmesystem	Heating system		400-449
Kylsystem	Cooling system		450-459
Utmatning	**Feeding out**	**500-599**	
Pump	Pump		500 - 509
Hygienisering på utmatningen	Pasteurization after digester		550
Utlastning	**Biofertilizer tank**	**600-699**	
Brunn 1	Biofertilizer tank 1		601
Brunn 2	Biofertilizer tank 2		602
Separering	Separation		610 - 619
Gasbehandling	**Gas treatment**	**700-799**	
Fläktar, ventiler mm på allmän gasledning	Components on general gas pipe		700
Kondensbrunn 1	Condensate pit		710
Fackla	Flare		720
Uppgrad/CHP/panna	Upgrading unit/CHP/boiler		730
Stripperluftförbränning i panna	Stripper air combustion		740
RTO	RTO		750
Högtryckskompressorstation	High pressure compressor station		760
LNG-anläggning	LNG plant		770
Propanisering	Propane dosing		780
Hjälpsystem	**Support system**	**800-899**	
Instrument luft	Instrument air		800
Hydraulsystem	Hydraulic system		805
Vatten	Water		810
Brutet vatten	Backflow protection system		815
Värmekabel	Heat tracing cable		820
Biltvätt	Car wash		830
Byggnad/Container	Building/container		840
Pumpbrunn	Pump tank		850
Oljeavskiljare	Oil separator		860
"Generella givare"	General sensors		870
Doserutrustning	Dosing equipment		880
Luktreducering-/ventilationsutrustning	Odour contro/ventilation system		890
Styr och el	**Electrical and Control**	**900-999**	
Styrskåp	Control Cabinet		900-949
Server	Server		950
Elkraft	Switchgear		990-999

Lines

Description	Symbol
Subcontractor scope	
Boundary line	
Page connector	
Start pipe - Not linked to page	
End pipe - Not linked to page	
Fald/ Slope	
Insulation	
Heat tracing	

Pipe Spec list	Code
Stainless steel pipes 1.4301	SS04
Stainless steel pipes 1.4304	SS16
Carbon steel P235TR1	CSTR
Carbon steel P235GH	CSGH
PE100 SDR17	PE17
PE100 SDR11	PE11
PE pipes for ventilation	PEVE

Bulding/Area/Tank

Description	Code
Primary digester	PD
Secondary digester	SD
Digester storage	DST
Liquid manure tank	LMT
Liquid biomass tank	LBT
Outlet tank	OT
Blackwater tank	BWT
Tech building	TB
Admin building	ADB
Solid biomass building	SBB
Liquid biomass building	LBB
Plansilo	PS
Pump house	PH
Hygienization tanks	HYG
Flare	FLA
Stack	STA
Odour treatment facility	OD
Upgrade facility	UPG
Liquifaction facility	LIQ
Oil boiler	OB
Wood boiler	WB
Transformer	TR

Media code

Media	Pipe color	RBG color	Code
Heat Return		0,37,245	HR
Heat Supply		255,0,0	HS
Heat Hot Return		255,223,127	HHR
Heat Hot Supply		238,129,129	HHS
Cooling Supply		0,255,183	CS
Cooling Return		126,189,189	CR
Black Water		36,39,132	BW
CIP		253,53,223	CIP
Process Water		170,170,255	PW
Technical Water		69,78,104	TW
Drinking Water		0,0,129	DW
Drinking Water Hot		0,127,255	DWH
Condensate		108,163,208	CW
Steam		255,82,82	ST
Steam Condensate		189,0,0	STC
Liquid Manure (Slurry)		240,130,40	LM
Liquid Biomass (Substrat)		128,0,255	LB
Process Biomass		165,103,82	PB
Hygienized Biomass		169,130,0	HB
Recirculated Biomass		165,103,82	RCB
Ferric Chloride FeCl		145,255,71	FeCL
Ventilation Odour Treatment		199,199,199	VOT
Ventilation Fresh Air		199,199,199	VFA
Compressed Air		64,64,64	CA
Oxygen		0,128,255	O2
Raw Biogas		255,255,0	RB
Return/reject Gas		116,118,4	RG
Nature Gas		0,255,127	NG
Instrument Leader		Green	N/A

Structure of the pipeline tagging system

The pipetag consists of various information about the pipe
Full pipeline tag as shown below

Size-PipeSpec-Area-Service (Medie)-Serial number

DN/OD100 PE17 201 LM 01

Example

- 01: Two (2) digits. Starts with 01 [01]
- LM: Two (2) to four (4) characters (letters) [LM - Liquid manure]
- 201: Three (3) digits [201 - Manure feeding in tank 1]
- PE17: Pipe Spec name [PE17 - PE100 SDR17]
- DN/OD100: Pipe size DN indication for Metric pipes OD indication for PE-pipe [This example is OD 100 mm]

The pipe tag will be shown on the P&ID as follows: PipeSpec-Size / Area-Service-Serialnumber

Example of line tag notation on P&ID: PE17-110 / 201-LM-01

Line color corresponding to table above.
The part below the pipeline is the Unique Line Tag.
Unique Line Tag is generated automatically when creating complete Line Tag.
Unique Line Tag is used by the P3D system when designing pipes in the 3D model and when generating Isometrics.

Rev. Nr.:	Rev. Dato:	Rev. Decription:

Builder: ST1
Project: SLK
Subject: PID Legend
Project nr..:1768
Drawing nr..:
PID Legend

Int.: CM | QC.: CM | APP.: | Date: 10-01-2025

LUNDSBY RENEWABLE SOLUTIONS
Lundsby Renewable Solutions A/S, Hjarbækvej 65, 8831 Løgstrup
Tlf.: +45 96 49 43 00 Info@lundsby.dk
This Drawing is subject to copywrite and may not be reproduced without permission from Lundsby Renewable Solutions A/S

FORMAT: A1

Valves

Hand valves

Symbols	Code	Description
	HV	General valve
	HV	Ball valve
	HV	Butterfly valve
	HV	Globe valve
	HV	Three way valve
	HV	Ground covered valve
	BV	Balancing valve

Actuated valves / Regulating valves

M	MV/RV	Motor ball valve
M	MV/RV	Motor butterfly valve
	AV/RV	Pneumatic ball valve
	AV/RV	Pneumatic valve
	AV	Solenoid valve

Safety valves

	SV	Exhaust valve covers
	SV	Safety valve
	SV	Breather valve

Mechanical valves

	PV	Pressure holding valve
	CV	Check valve
	VV	Venting valve

Equipment

Pumps / Compressors / Blowers

Symbols	Code	Description
	P	Pump (General)
	P	Positive displacement pump
	P	Helical rotor pump
	P	Centrifugal pump
	P	Peristaltic pump
	MC	Rotacut
	MC	Disruptor
	FA	Blower
	CO	General compressor

Heating and Cooling

	HX	Heat exchanger - Shell & tube
	HX	Heat exchanger - plate
	HX	Heat exchanger - double pipe
	HX	Heating coil (in tank)
Heatpump	HS	Heatpump

Tank equipment

	AG	ISO Agitator - Propeller
	AG	Agitator
	LA	Light
	CA	Camera
	FH	Foam hatch

Filters and Vessels

	AT	General filter / Forfilter
	AT	General liquid
	AT	Drier - General
	F	Suction hood
EXP	EXP	Expansion tank

Equipment

Symbols	Code	Description
	MX	Bio mixer
	MC	Premix
	CV	Debris lift unit
	CV	Screw conveyor
	CV	Belt conveyor
	CRA	Crane
	CH	ISO Stack - Chimney
	FL	Flare
	PD	Pulsation damper
	SP	Screw press

Tanks

	DT	Digester tank
	ST	Storage tank
	DT/ST	Storage tank with cover
	HT	Gas/Hyginisation tank
	TA	Buried tank

Piping

Piping symbols

Symbols	Code	Description
	N/A	Offpage connector
	N/A	Flange connection
	N/A	Blind flange
	NO	Truck nozzle
	NO	Funnel/Drain
	AS	Expansion joint
	SN	Strainer
	N/A	Going into the ground / Coming up from
	AJ	Concentric reducer
	AJ	Eccentric reducer
	AX	Sample point
	BS	Inline silencer
No Target-No Target(No Target)	BU	Electrical heat tracing

Revision clouds

Instruments

Description

Instruments will be tagged

XXX - XX - XX
Main area code - Letter code - Numeric sequence

XX First letter
XX Succeeding letter
XX Numeric sequence

Description	Example
Field instrument	TI 01 — Temperature indication 01
Instrument with connection to control	LS 02 — Level switch 02

Instruments with succeeding letter T is an analog signal.
Instruments with succeeding letter S is a digital signal.

Givartyper	Engelsk översättning	Förkortning
Analysinindikator	analyze indicator	AI
Analysgivare	Analyse transmitter	AT
Energimätare	Energi transmitter	ET
Flödesgivare	Flow indicator	FI
Flödesgivare	Flow transmitter	FT
Flödesvakt	Flow switch	FS
Flödesgivare	Flow transmitter	FT
Generell vakt	General Switch	GS
Nivåvakt	Level Switch	LS
Nivåindikator	Level indicator	LI
Nivågivare	Level Transmitter	LT
Tryckindikator/manometer	Pressure indicator	PI
Tryckvakt	Pressure switch	PS
Tryckgivare	Pressure transmitter	PT
Temperaturindikator	Thermometer	TI
Temperaturgivare	Temperature transmitter	TT
Viktgivare	Weight transmitter	WT

Various instruments

Ex	?	Atex instrument
F	FT	Flow transmitter
F	EM	Energy meter
	SI	Siren
M	M	Electric motor
AK	AK	Units with own switchboard
	K	Control box

Rev. Nr.:	Rev. Dato:	Rev. Beskrivelse:

Builder: ST1
Project: SLK
Subject: PID legend 2

Int.: CM | QC: CM | APP.: | Date: 10-01-2025

Project nr.: 1768
Drawing nr.:
PID legend 2

LUNDSBY RENEWABLE SOLUTIONS
Lundsby Biogas A/S, Hjarbækvej 65, 8831 Løgstrup
Tlf.: +45 96 49 43 00 Info@lundsbybiogas.dk
Denne tegning er underlagt copywrite op må ikke reproduceres uden tilladelse fra Lundsbybiogas A/S

FORMAT: A1

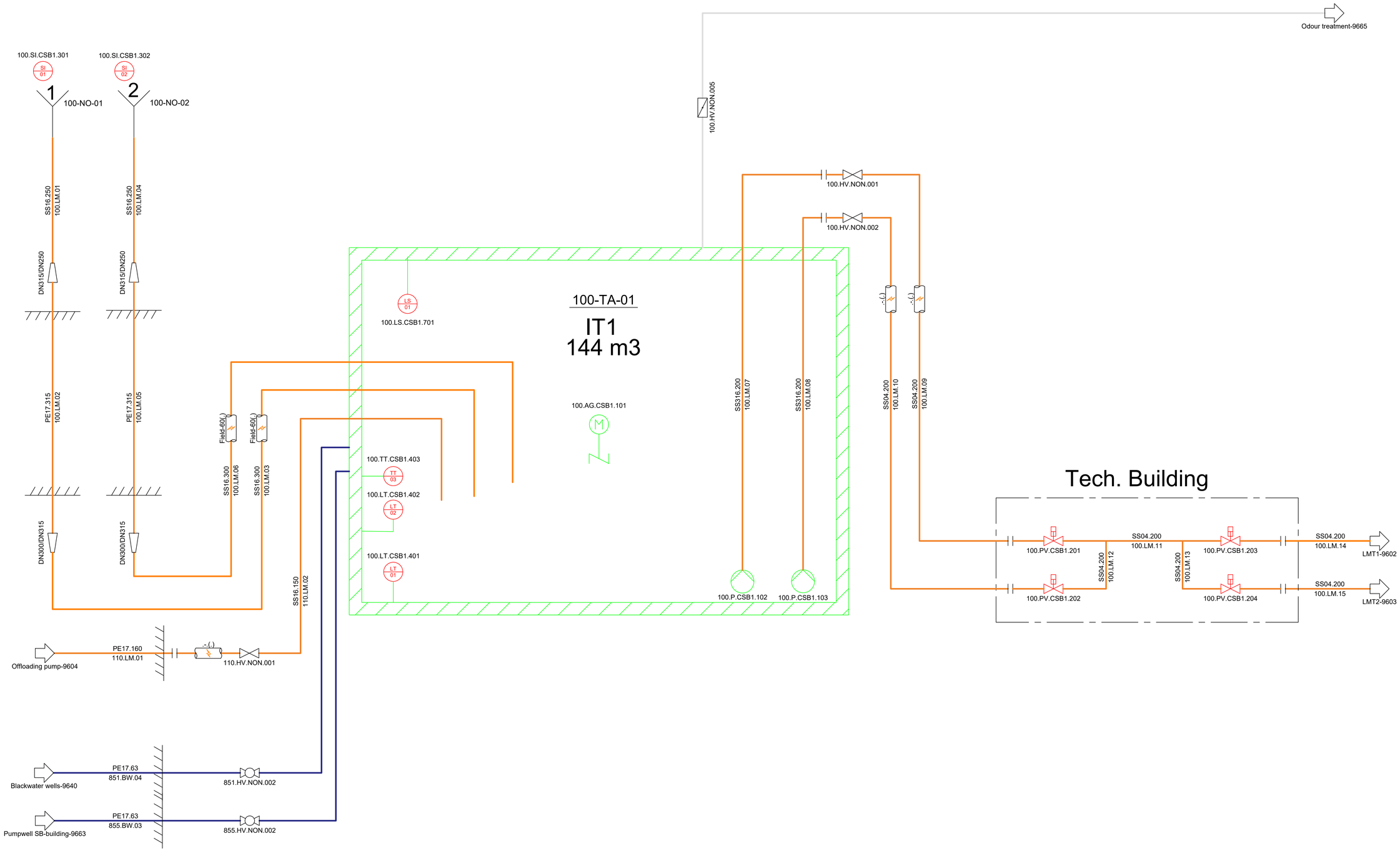

Rev. Nr.:	Rev. Dato:	Rev. Decription:

Builder: ST1

Project: SLK

Subject: Intake tank 1
Rev. 2

Int.: MDC | QC.CM | APP.: | Date: 26-06-2025

Project nr..1768

Drawing nr..:
9601

FORMAT: A1

LUNDSBY RENEWABLE SOLUTIONS

Lundsby Renewable Solutions A/S, Hjarbækvej 65, 8831 Løgstrup
Tlf.: +45 96 49 43 00 Info@lundsby.dk
This Drawing is subject to copywrite and may not be reproduced without permission from Lundsby Renewable Solutions A/S

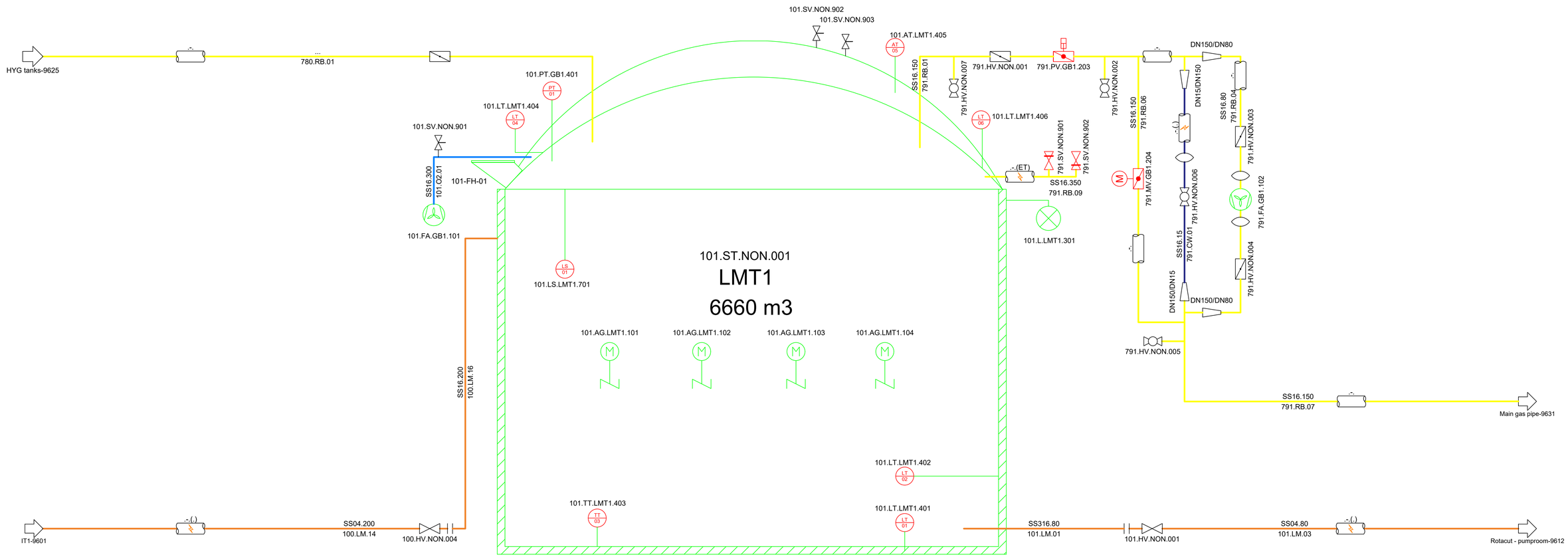

Rev. Nr.:	Rev. Dato:	Rev. Decription:

Builder:	ST1
Project:	SLK
Subject:	Liquid Manure Tank 1 Rev. 2
Int.: MDC	QC.CM
APP.:	
Date: 26-06-2025	

Project nr..1768

Drawing nr..:
9602

FORMAT: A1

LUNDSBY RENEWABLE SOLUTIONS
Lundsby Renewable Solutions A/S, Hjarbækvej 65, 8831 Løgstrup
Tlf.: +45 96 49 43 00 Info@lundsby.dk
This Drawing is subject to copywrite and may not be reproduced without permission from Lundsby Renewable Solutions A/S

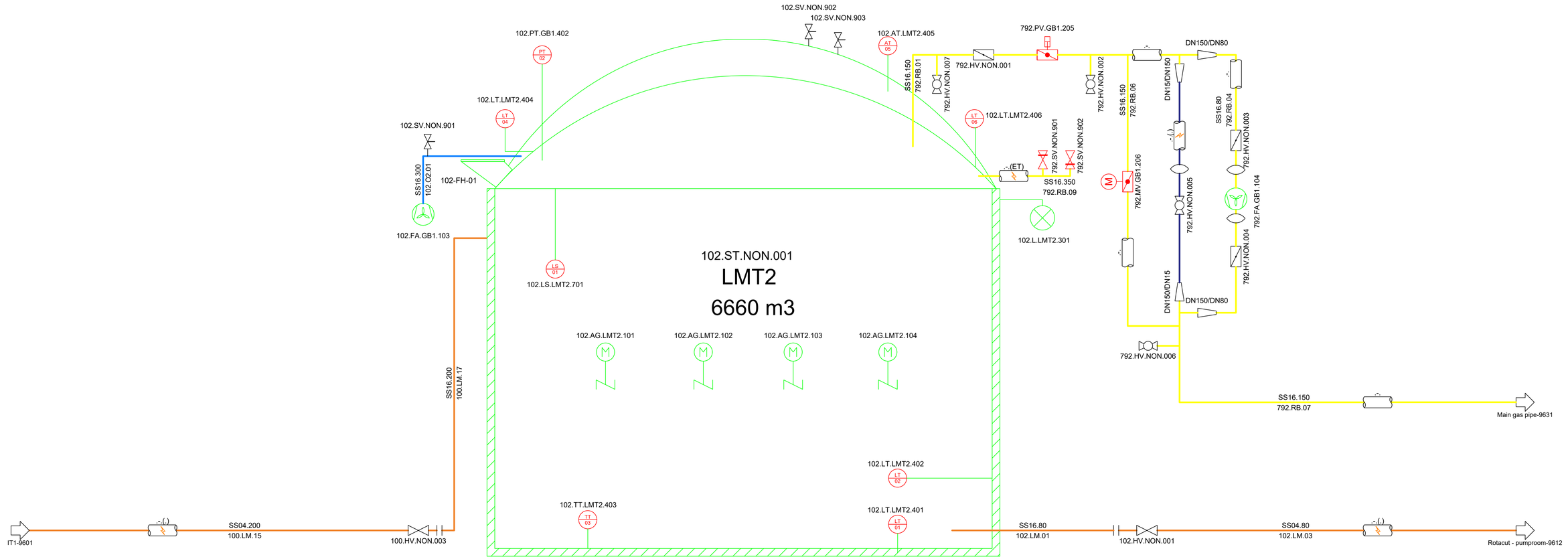

Rev. Nr.:	Rev. Dato:	Rev. Decription:

Builder: ST1

Project: SLK

Subject: Liquid Manure Tank 2
Rev. 2

Int.: MDC | QC.CM | APP.: | Date: 26-06-2025

Project nr..: 1768

Drawing nr..:
9603

FORMAT: A1

LUNDSBY RENEWABLE SOLUTIONS
Lundsby Renewable Solutions A/S, Hjarbækvej 65, 8831 Løgstrup
Tlf.: +45 96 49 43 00 Info@lundsby.dk
This Drawing is subject to copywrite and may not be reproduced without permission from Lundsby Renewable Solutions A/S

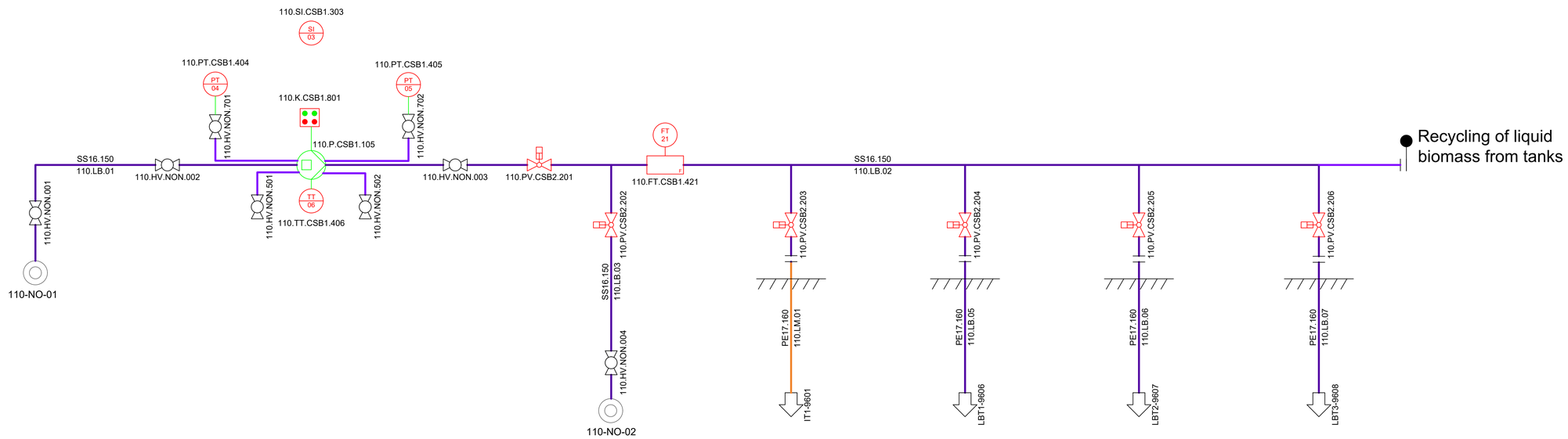

Rev. Nr.:	Rev. Dato:	Rev. Decription:

Builder: ST1

Project: SLK

Subject: Liquid biomass delivery pump
Rev. 2

Int.: MDC | QC.CM | APP.: | Date: 26-06-2025

Project nr..:1768

Drawing nr..:
9604

FORMAT: A1

LUNDSBY RENEWABLE SOLUTIONS
Lundsby Renewable Solutions A/S, Hjarbækvej 65, 8831 Løgstrup
Tlf.: +45 96 49 43 00 Info@lundsby.dk
This Drawing is subject to copywrite and may not be reproduced without permission from Lundsby Renewable Solutions A/S

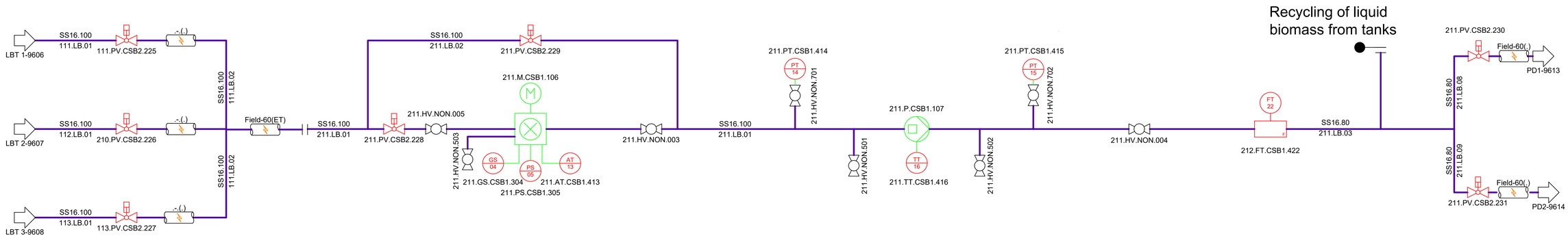

Rev. Nr.:	Rev. Dato:	Rev. Decription:

Builder: ST1

Project: SLK

Subject: Liquid biomass process pump
Rev. 2

Int.: MDC | QC.CM | APP.: | Date: 26-06-2025

Project nr..1768

Drawing nr..:
9605

FORMAT: A1

LUNDSBY RENEWABLE SOLUTIONS
Lundsby Renewable Solutions A/S, Hjarbækvej 65, 8831 Løgstrup
Tlf.: +45 96 49 43 00 Info@lundsby.dk
This Drawing is subject to copywrite and may not be reproduced without permission from Lundsby Renewable Solutions A/S

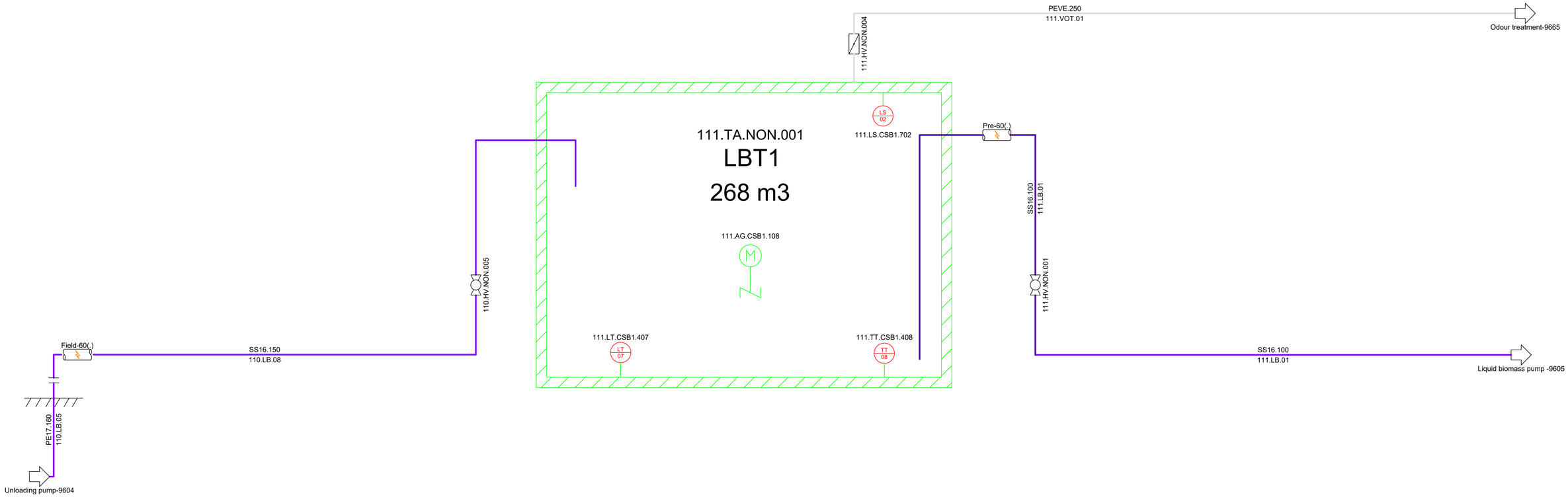

Rev. Nr.:	Rev. Dato:	Rev. Decription:

Builder: ST1

Project: SLK

Subject: Liquid biomass tank 1
Rev. 2

Int.: MDC | QC.CM | APP.: | Date: 26-06-2025

Project nr..1768

Drawing nr..:
9606

LUNDSBY RENEWABLE SOLUTIONS
Lundsby Renewable Solutions A/S, Hjarbækvej 65, 8831 Løgstrup
Tlf.: +45 96 49 43 00 Info@lundsby.dk
This Drawing is subject to copywrite and may not be reproduced without permission from Lundsby Renewable Solutions A/S

FORMAT: A1

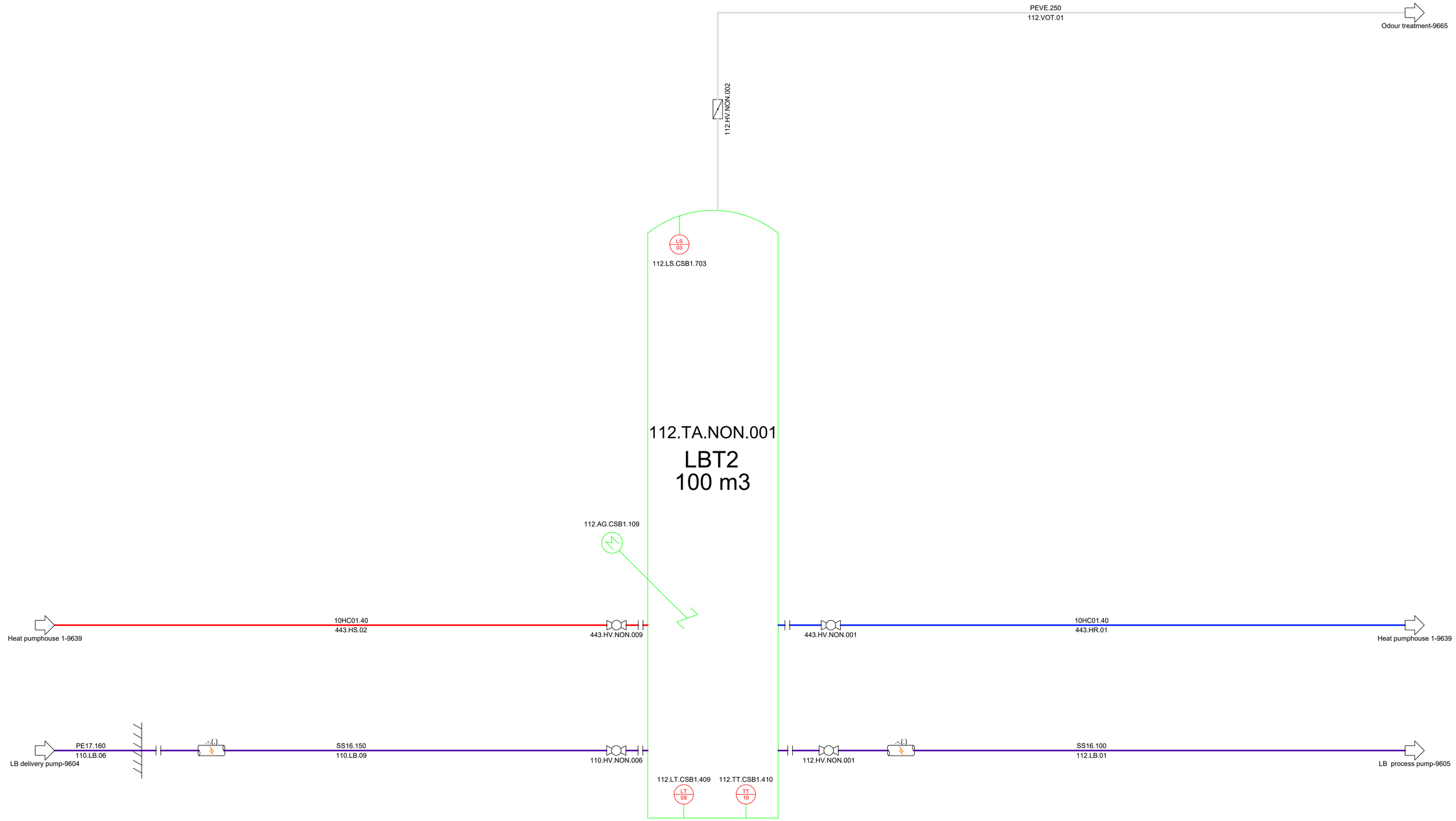

Rev. Nr.:	Rev. Dato:	Rev. Decription:

Builder: ST1

Project: SLK

Subject: Liquid biomass tank 2
Rev. 2

Int.: MDC | QC.CM | APP.: | Date: 26-06-2025

Project nr..1768

Drawing nr..:
9607

LUNDSBY RENEWABLE SOLUTIONS

Lundsby Renewable Solutions A/S, Hjarbækvej 65, 8831 Løgstrup
Tlf.: +45 96 49 43 00 Info@lundsby.dk
This Drawing is subject to copywrite and may not be reproduced without permission from Lundsby Renewable Solutions A/S

FORMAT: A1

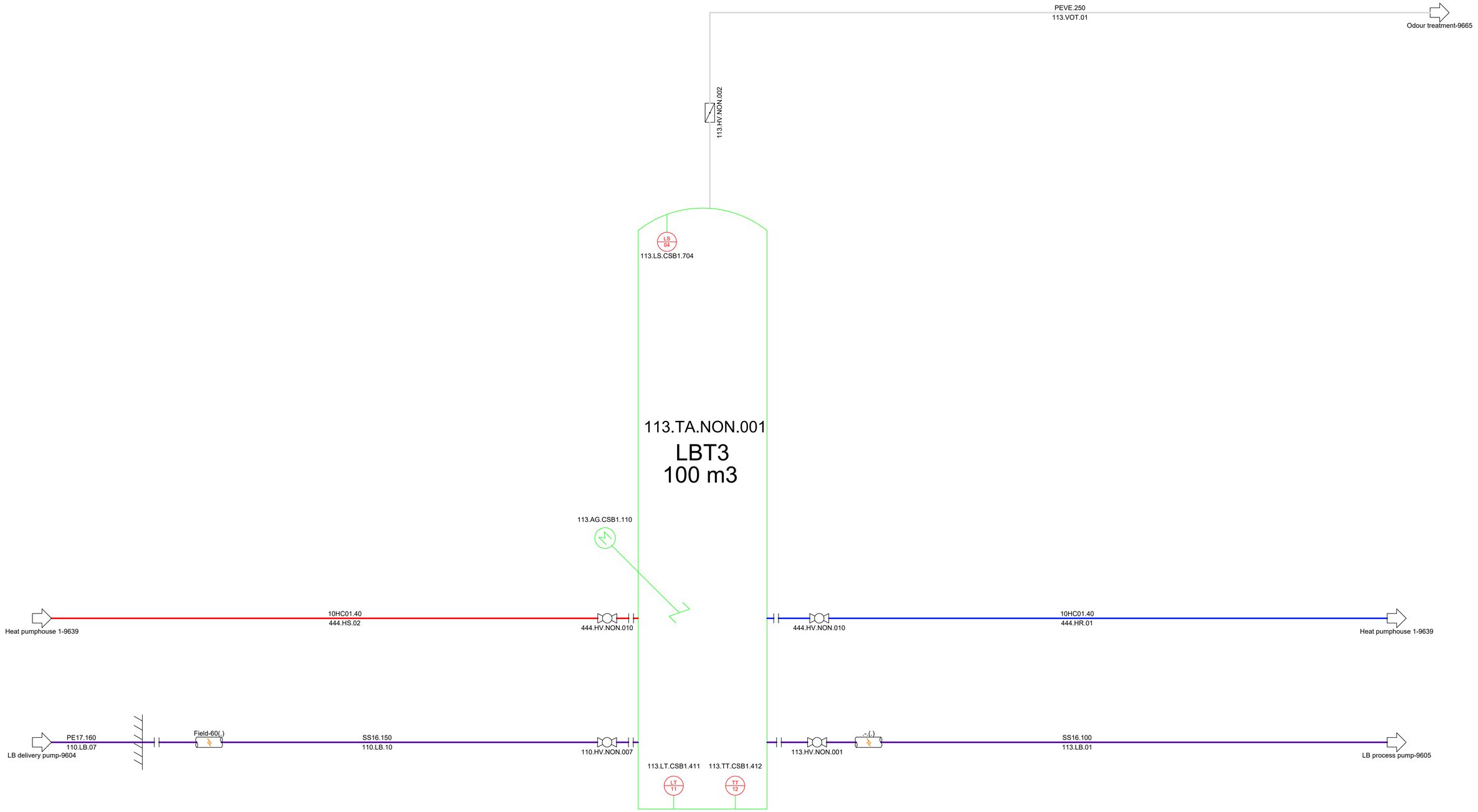

Rev. Nr.:	Rev. Dato:	Rev. Decription:

Builder:	ST1		
Project:	SLK		Project nr..1768
Subject:	Liquid biomass tank 3 Rev. 2		Drawing nr..: 9608
Int.: MDC	QC.CM	APP.:	Date: 26-06-2025

LUNDSBY RENEWABLE SOLUTIONS
Lundsby Renewable Solutions A/S, Hjarbækvej 65, 8831 Løgstrup
Tlf.: +45 96 49 43 00 Info@lundsby.dk
This Drawing is subject to copywrite and may not be reproduced without permission from Lundsby Renewable Solutions A/S

FORMAT: A1

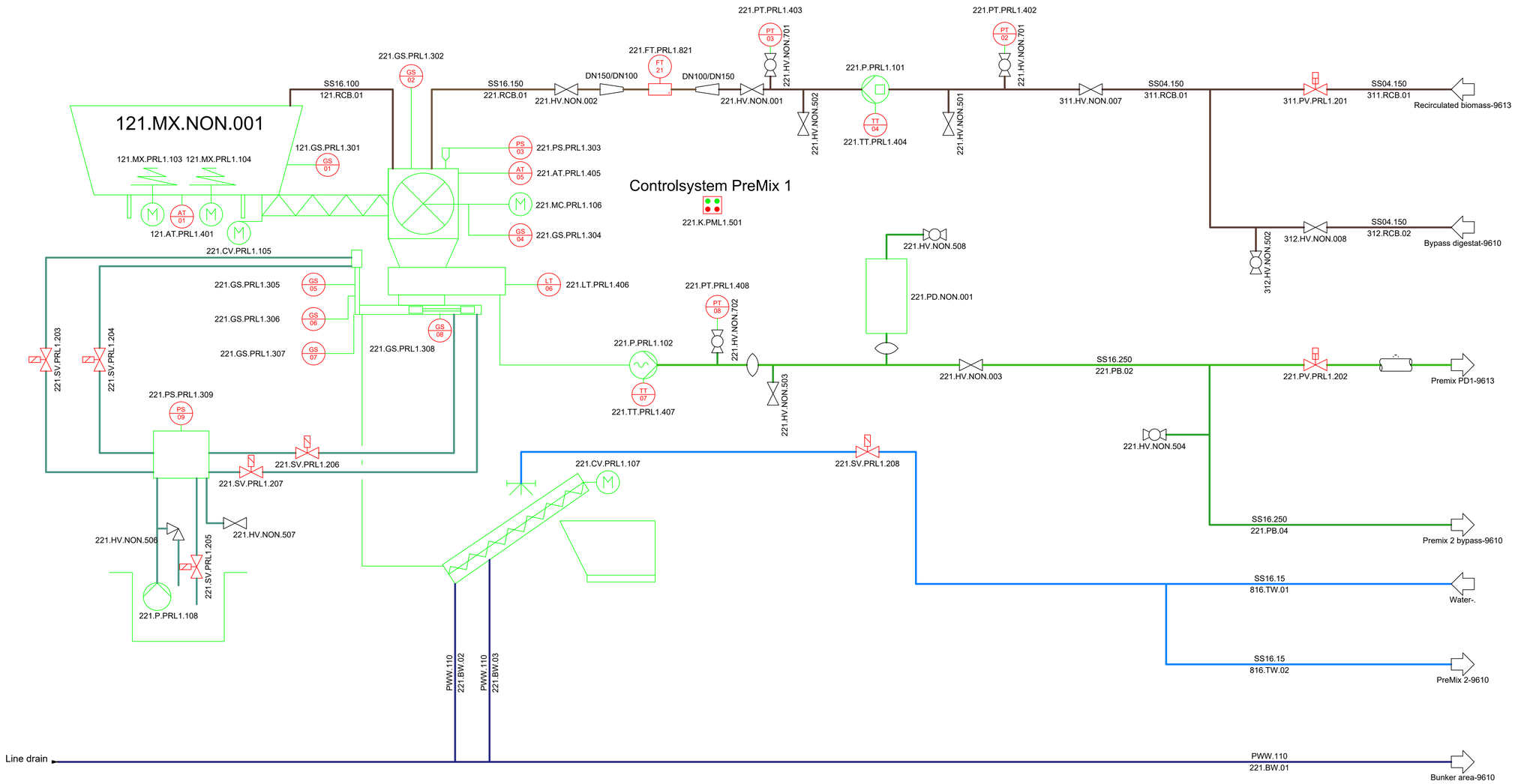

Rev. Nr.:	Rev. Dato:	Rev. Decription:

Builder: ST1

Project: SLK

Subject: Premix 1
Rev. 2

Int.: MDC | QC.CM | APP.: | Date: 26-06-2025

Project nr..: 1768

Drawing nr..: 9609

FORMAT: A1

LUNDSBY RENEWABLE SOLUTIONS
Lundsby Renewable Solutions A/S, Hjarbækvej 65, 8831 Løgstrup
Tlf.: +45 96 49 43 00 Info@lundsby.dk
This Drawing is subject to copywrite and may not be reproduced without permission from Lundsby Renewable Solutions A/S

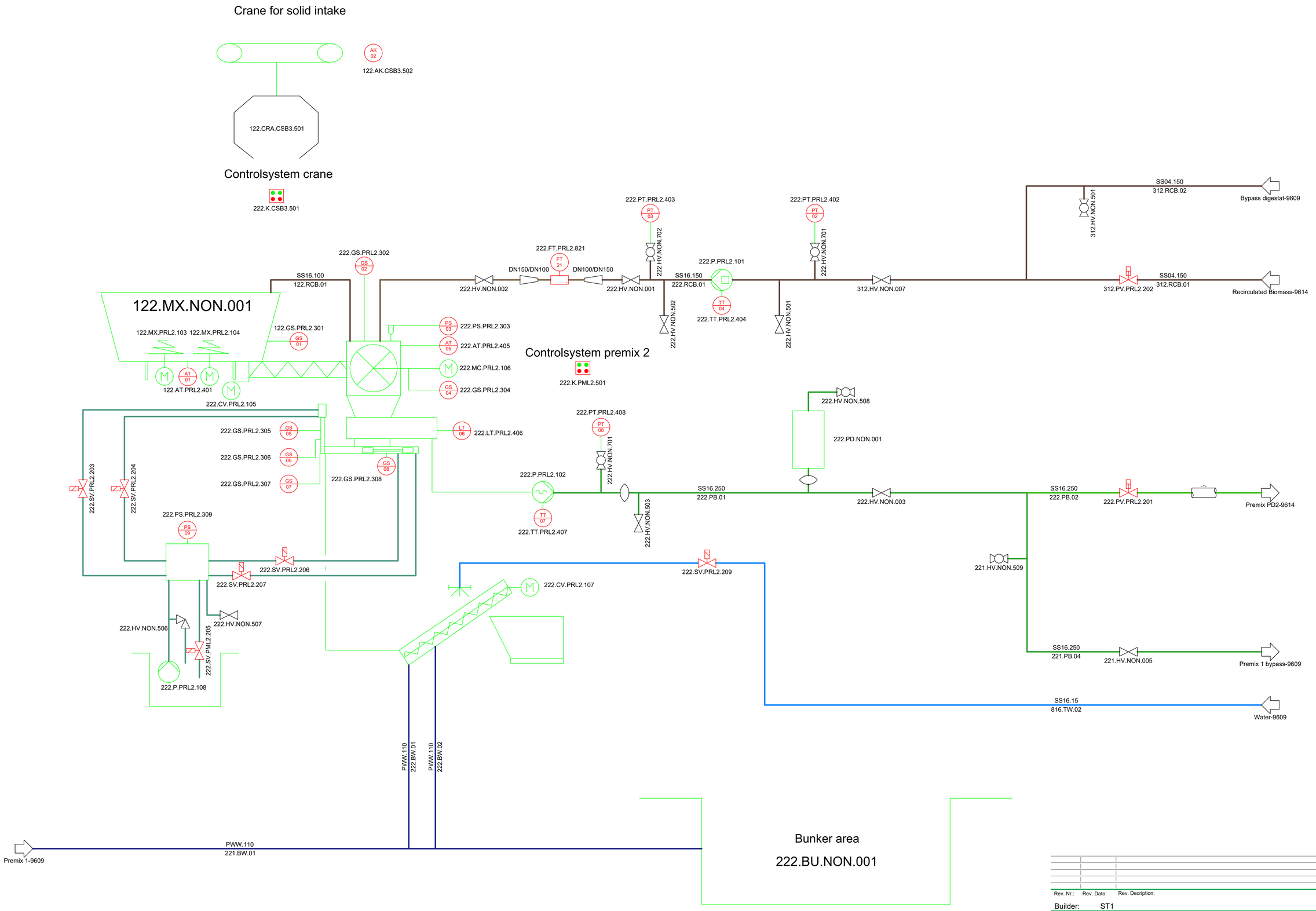

Rev. Nr.:	Rev. Dato:	Rev. Decription:

Builder: ST1

Project: SLK

Subject: Premix 2
Rev. 2

Int.: MDC | QC.CM | APP.: | Date: 26-06-2025

Project nr..: 1768

Drawing nr..: 9610

FORMAT: A1

LUNDSBY RENEWABLE SOLUTIONS
Lundsby Renewable Solutions A/S, Hjarbækvej 65, 8831 Løgstrup
Tlf.: +45 96 49 43 00 Info@lundsby.dk
This Drawing is subject to copywrite and may not be reproduced without permission from Lundsby Renewable Solutions A/S

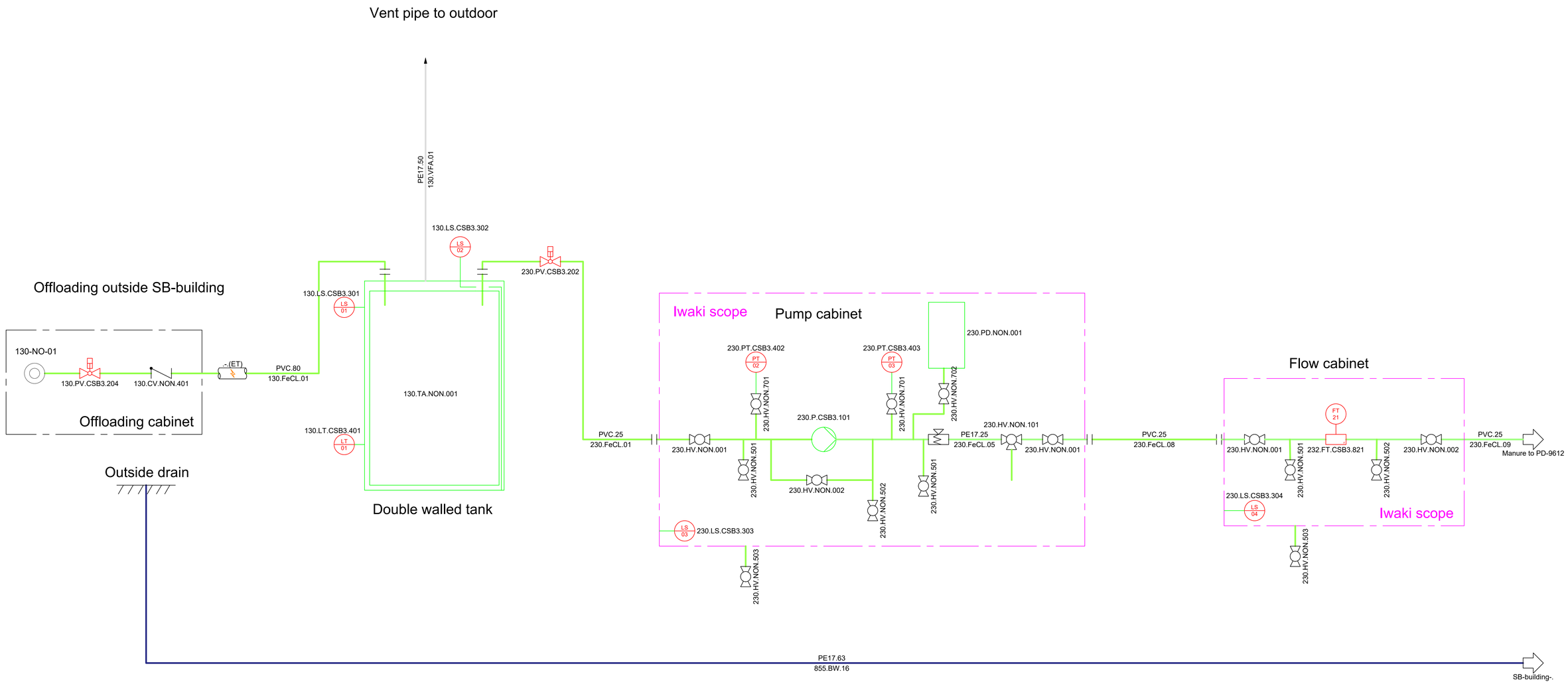

Rev. Nr.:	Rev. Dato:	Rev. Decription:

Builder: ST1

Project: SLK

Subject: FECL system
Rev. 2

Int.: MDC | QC.CM | APP.: | Date: 26-06-2025

Project nr..1768

Drawing nr..:
9611

FORMAT: A1

LUNDSBY RENEWABLE SOLUTIONS
Lundsby Renewable Solutions A/S, Hjarbækvej 65, 8831 Løgstrup
Tlf.: +45 96 49 43 00 Info@lundsby.dk
This Drawing is subject to copywrite and may not be reproduced without permission from Lundsby Renewable Solutions A/S

Pumphouse 2

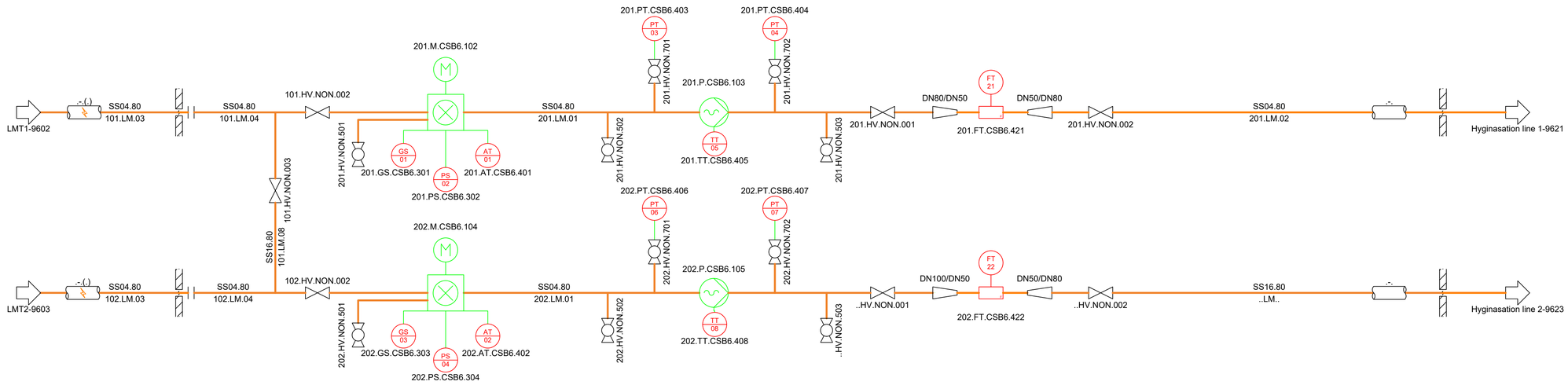

Tech building

SB-building

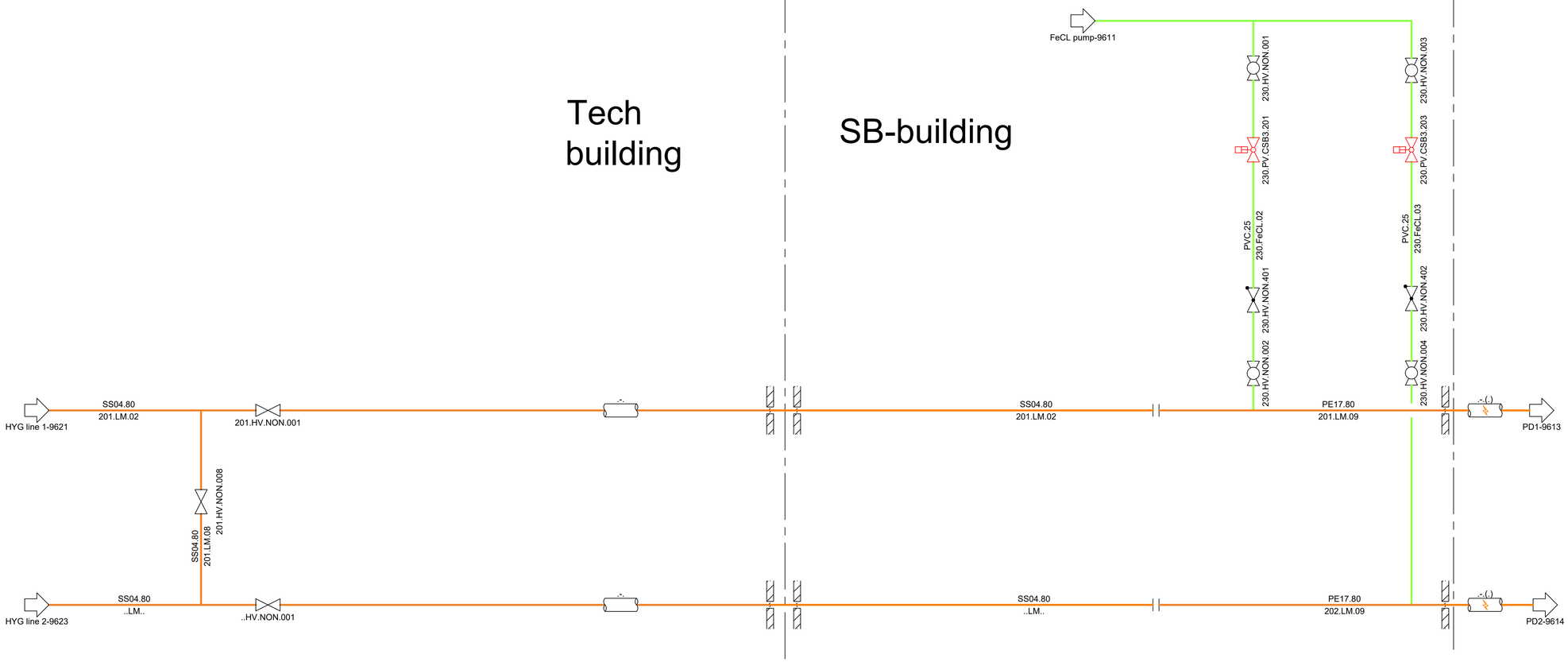

Rev. Nr.:	Rev. Dato:	Rev. Decription:

Builder:	ST1		
Project:	SLK		
Subject:	Liquid manure pump Rev. 2		
Int.: MDC	QC.CM	APP.:	Date: 26-06-2025

Project nr..:1768

Drawing nr..:
9612

FORMAT: A1

LUNDSBY RENEWABLE SOLUTIONS
Lundsby Renewable Solutions A/S, Hjarbækvej 65, 8831 Løgstrup
Tlf.: +45 96 49 43 00 Info@lundsby.dk
This Drawing is subject to copywrite and may not be reproduced without permission from Lundsby Renewable Solutions A/S

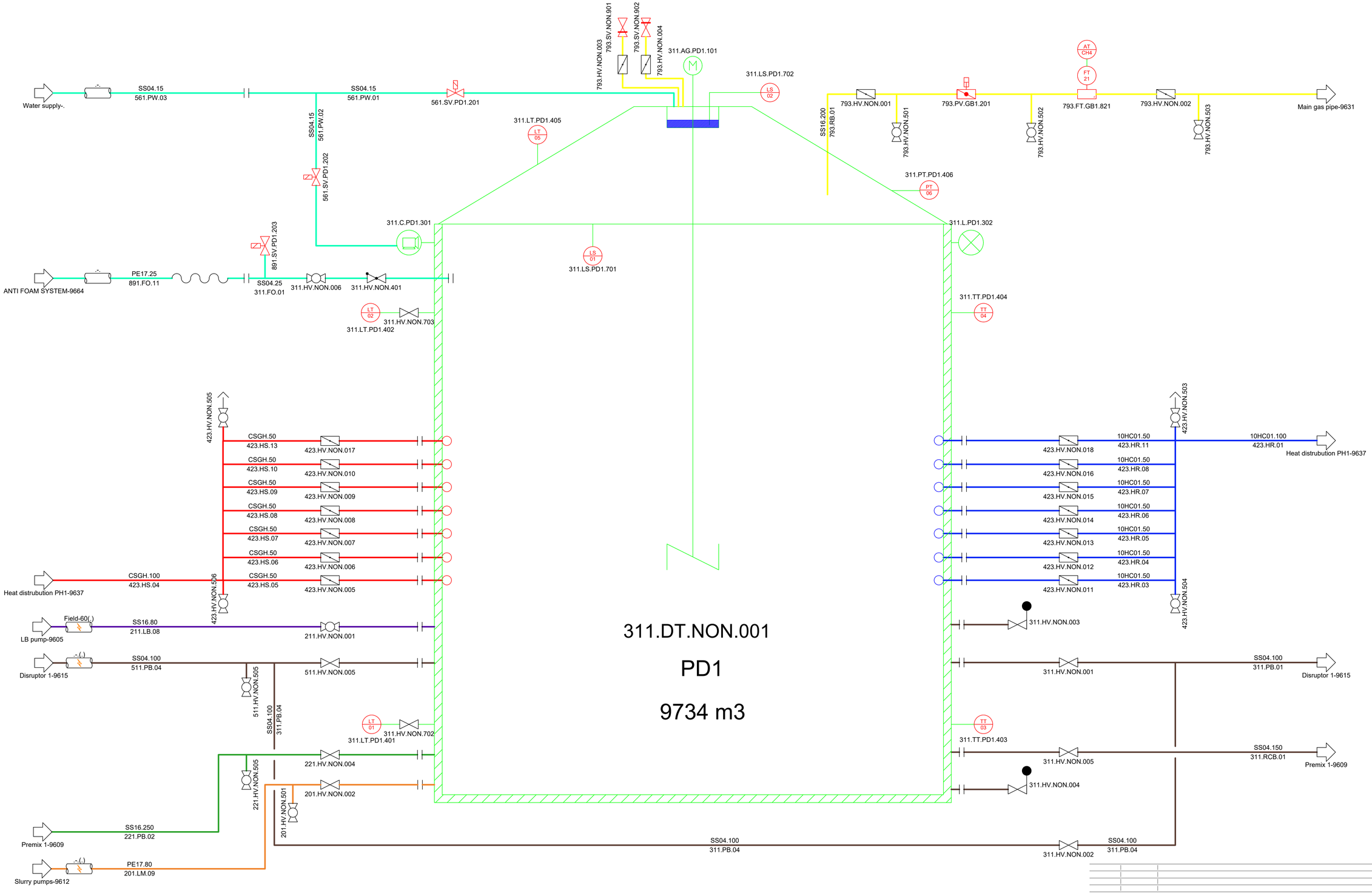

Rev. Nr.:	Rev. Dato:	Rev. Decription:

Builder:	ST1		
Project:	SLK		Project nr..1768
Subject:	Primary digester 1 Rev. 2		Drawing nr..: 9613
Int.: MDC	QC.CM	APP.:	Date: 26-06-2025

LUNDSBY RENEWABLE SOLUTIONS
Lundsby Renewable Solutions A/S, Hjarbækvej 65, 8831 Løgstrup
Tlf.: +45 96 49 43 00 Info@lundsby.dk
This Drawing is subject to copywrite and may not be reproduced without permission from Lundsby Renewable Solutions A/S

FORMAT: A1

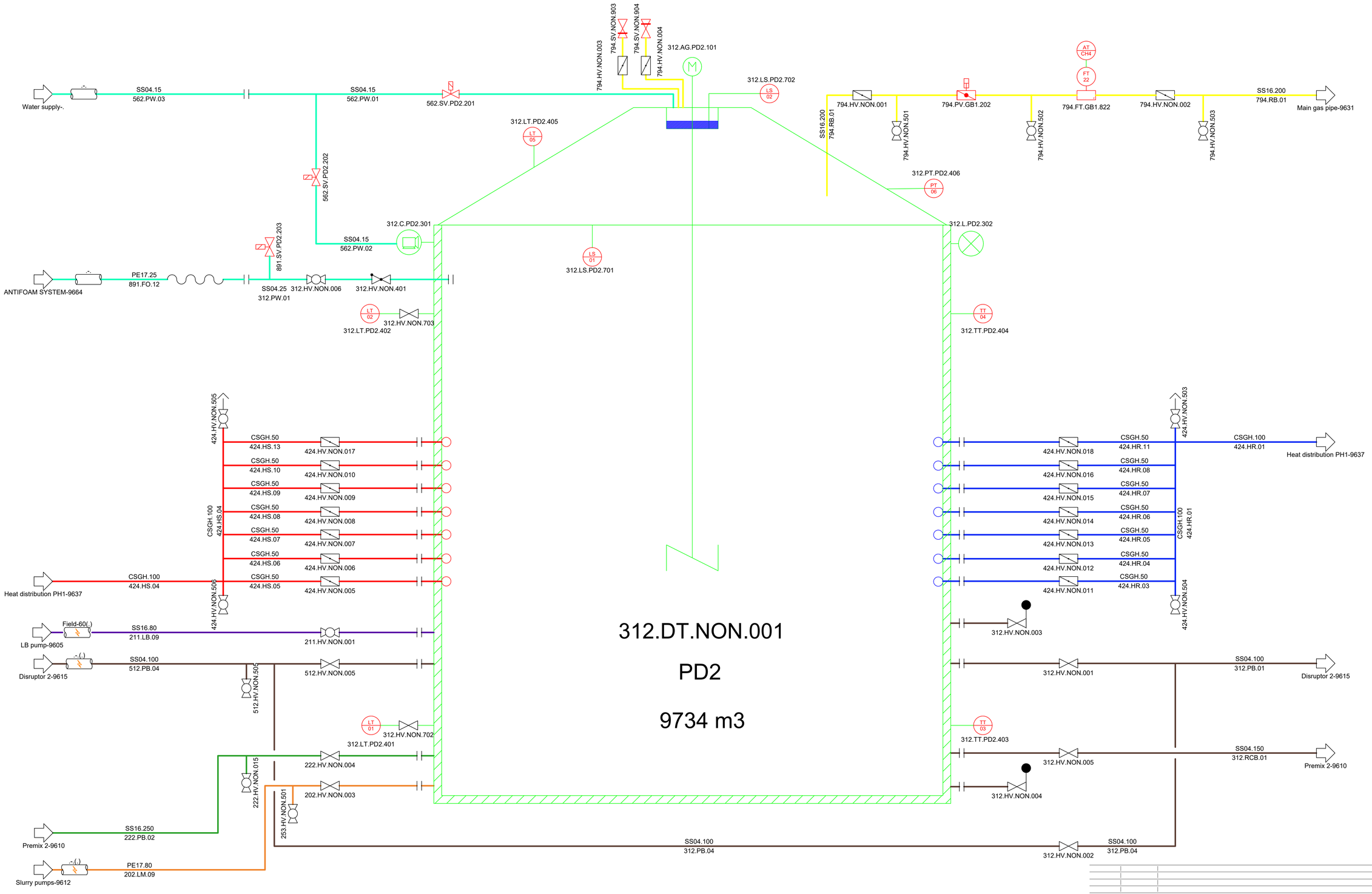

Rev. Nr.:	Rev. Dato:	Rev. Decription:

Builder: ST1

Project: SLK

Subject: Primary digester 2
Rev. 2

Int.: MDC | QC.CM | APP.: | Date: 26-06-2025

Project nr..1768

Drawing nr..:
9614

LUNDSBY RENEWABLE SOLUTIONS

Lundsby Renewable Solutions A/S, Hjarbækvej 65, 8831 Løgstrup
Tlf.: +45 96 49 43 00 Info@lundsby.dk

This Drawing is subject to copywrite and may not be reproduced without permission from Lundsby Renewable Solutions A/S

FORMAT: A1

Pumphouse 1

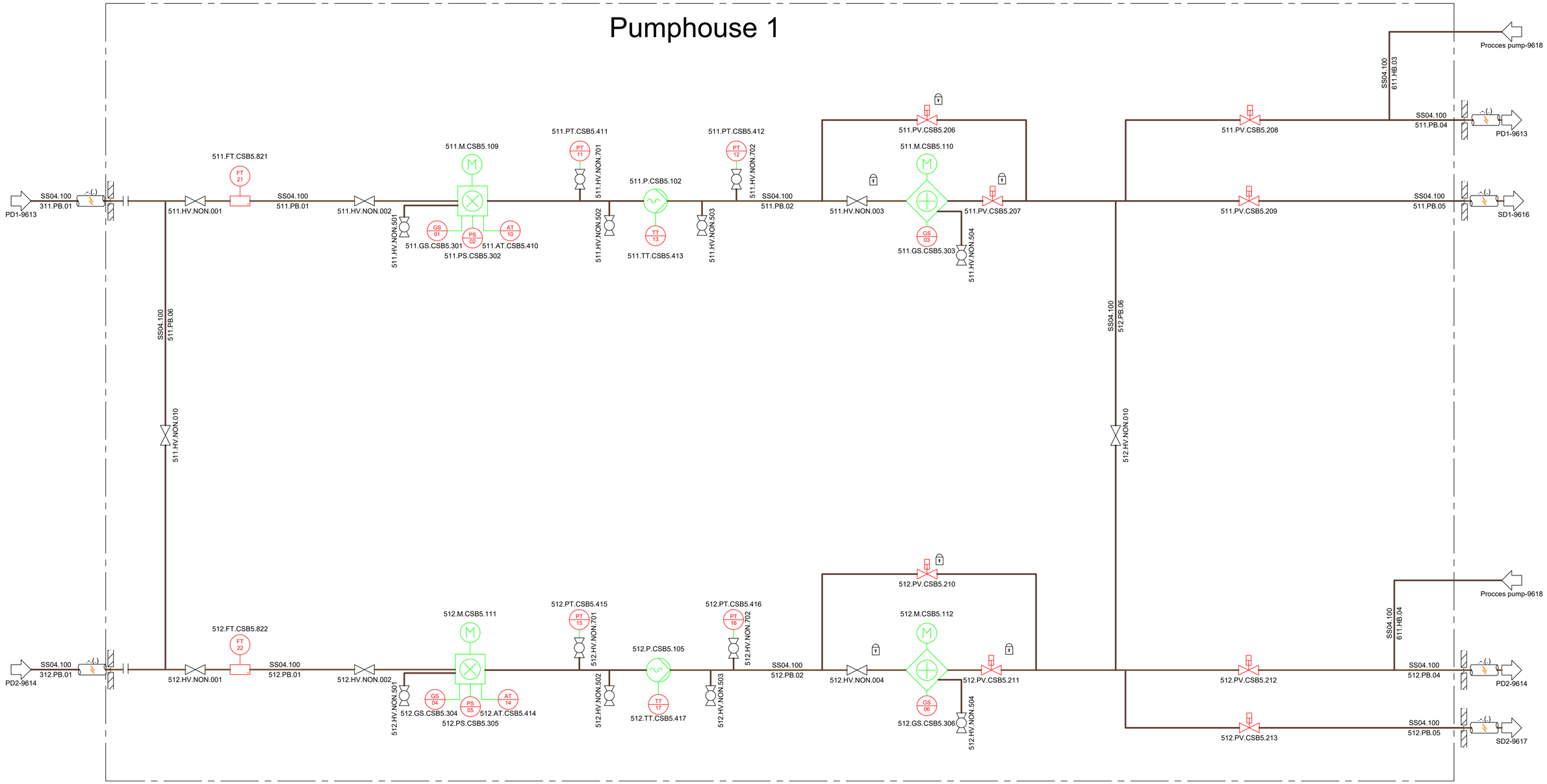

Rev. Nr.:	Rev. Dato:	Rev. Decription:

Builder:	ST1		
Project:	SLK		Project nr..1768
Subject:	Disruptor 1 and 2 Rev. 2		Drawing nr..: 9615
Int.: MDC	QC.CM	APP.:	Date: 26-06-2025

LUNDSBY RENEWABLE SOLUTIONS
Lundsby Renewable Solutions A/S, Hjarbækvej 65, 8831 Løgstrup
Tlf.: +45 96 49 43 00 Info@lundsby.dk
This Drawing is subject to copywrite and may not be reproduced without permission from Lundsby Renewable Solutions A/S

FORMAT: A1

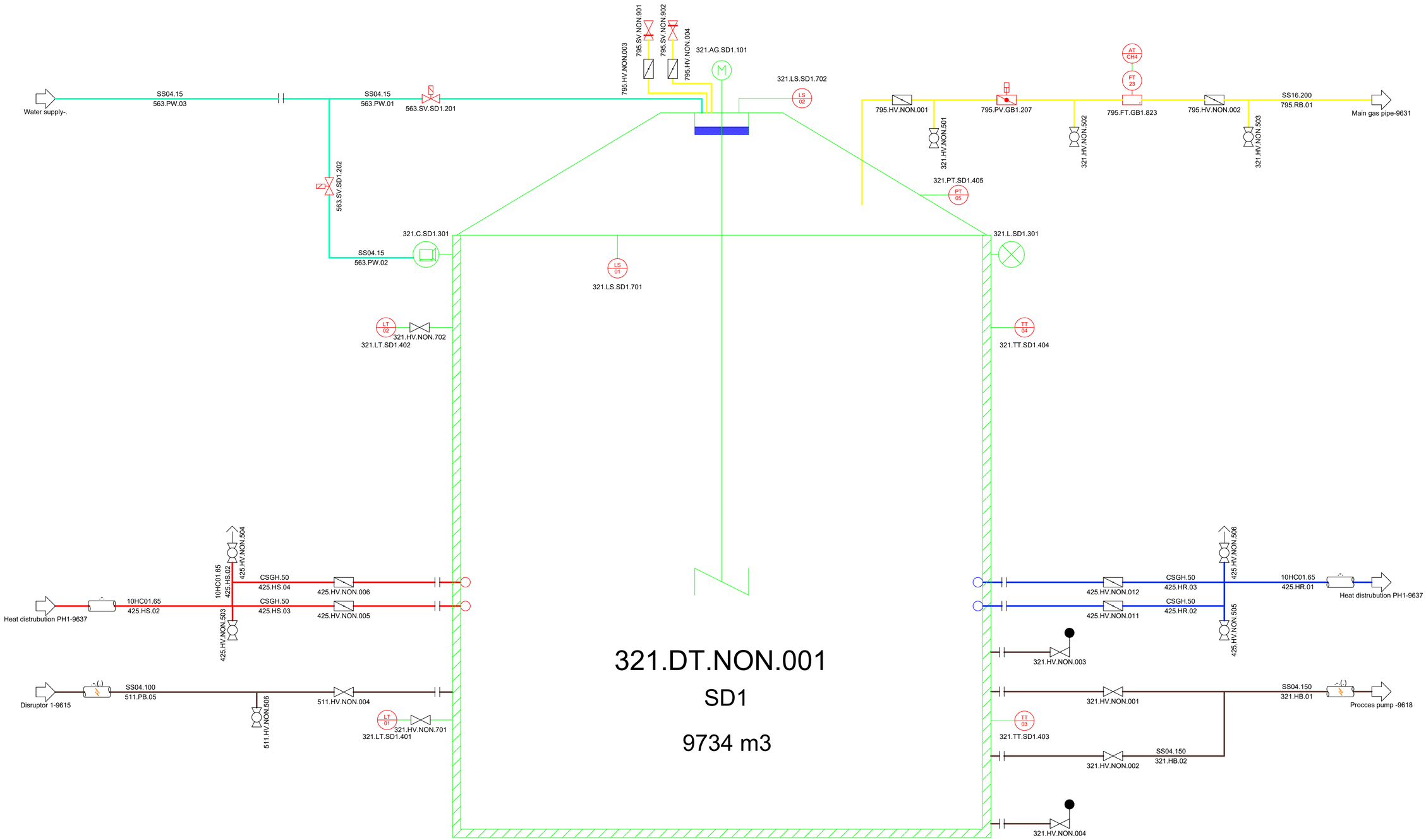

Rev. Nr.:	Rev. Dato:	Rev. Decription:

Builder:	ST1		
Project:	SLK		Project nr..1768
Subject:	Secondary digester 1 Rev. 2		Drawing nr..: 9616
Int.: MDC	QC: CM	APP.:	Date: 26-06-2025

LUNDSBY RENEWABLE SOLUTIONS

Lundsby Renewable Solutions A/S, Hjarbækvej 65, 8831 Løgstrup
Tlf.: +45 96 49 43 00 Info@lundsby.dk
This Drawing is subject to copywrite and may not be reproduced without permission from Lundsby Renewable Solutions A/S

FORMAT: A1

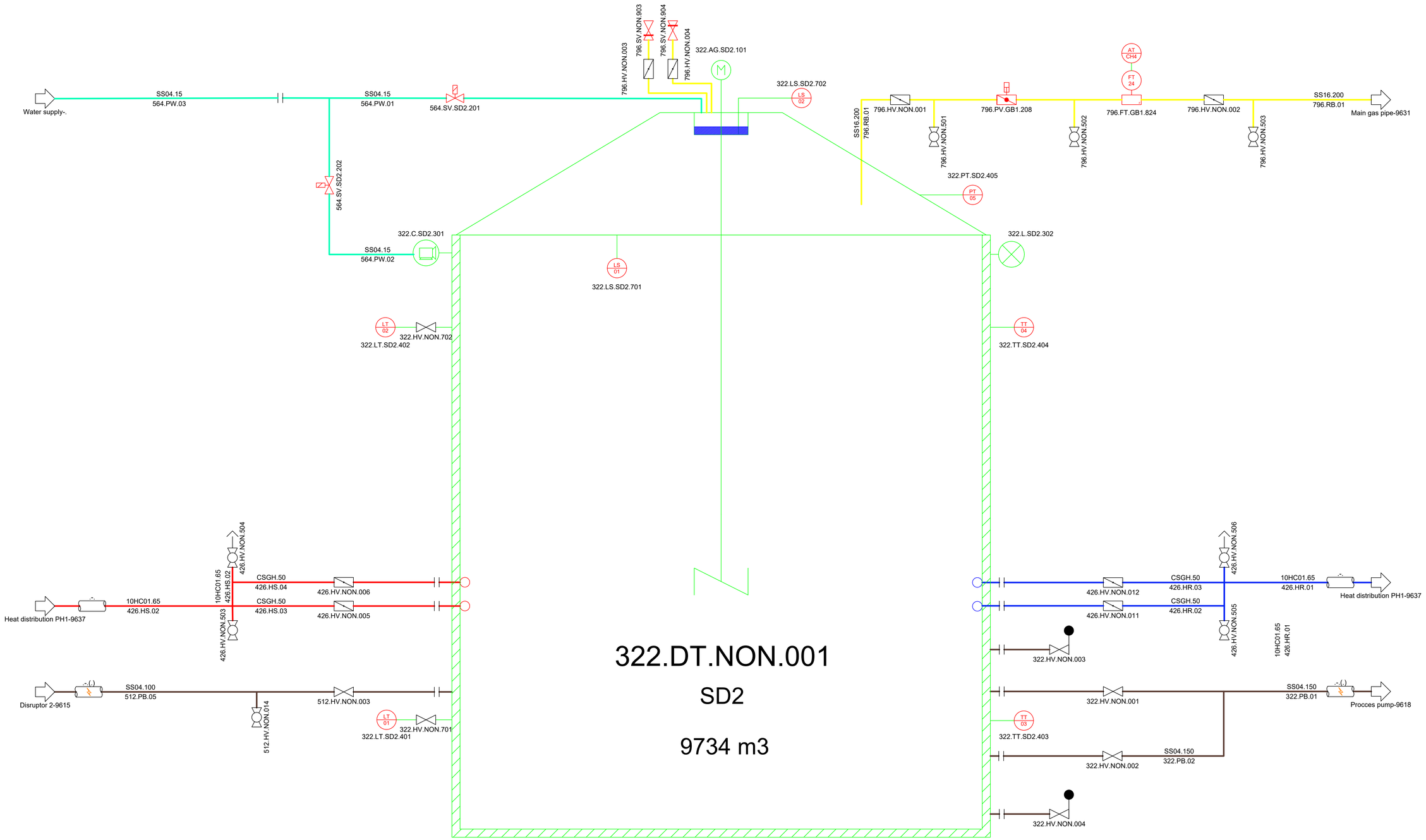

Rev. Nr.:	Rev. Dato:	Rev. Decription:

Builder:	ST1		
Project:	SLK		Project nr..1768
Subject:	Secondary digester 2 Rev. 2		Drawing nr..: 9617
Int.: MDC	QC.CM	APP.:	Date: 26-06-2025

LUNDSBY RENEWABLE SOLUTIONS
Lundsby Renewable Solutions A/S, Hjarbækvej 65, 8831 Løgstrup
Tlf.: +45 96 49 43 00 Info@lundsby.dk
This Drawing is subject to copywrite and may not be reproduced without permission from Lundsby Renewable Solutions A/S

FORMAT: A1

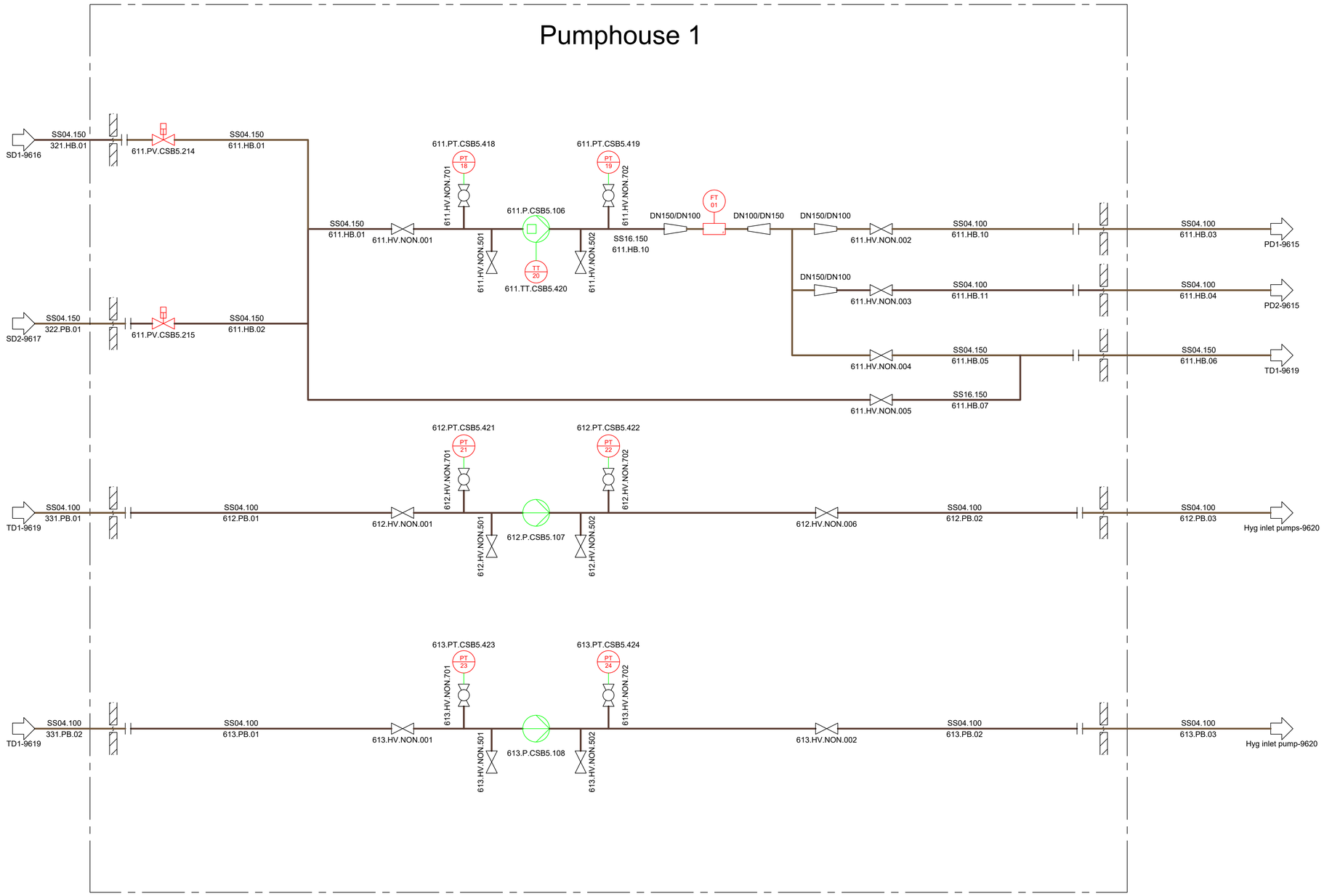

Rev. Nr.:	Rev. Dato:	Rev. Decription:

Builder:	ST1		
Project:	SLK		Project nr..1768
Subject:	Procces pumps Rev. 2		Drawing nr..: 9618
Int.: MDC	QC.CM	APP.:	Date: 26-06-2025

LUNDSBY RENEWABLE SOLUTIONS
Lundsby Renewable Solutions A/S, Hjarbækvej 65, 8831 Løgstrup
Tlf.: +45 96 49 43 00 Info@lundsby.dk
This Drawing is subject to copywrite and may not be reproduced without permission from Lundsby Renewable Solutions A/S

FORMAT: A1

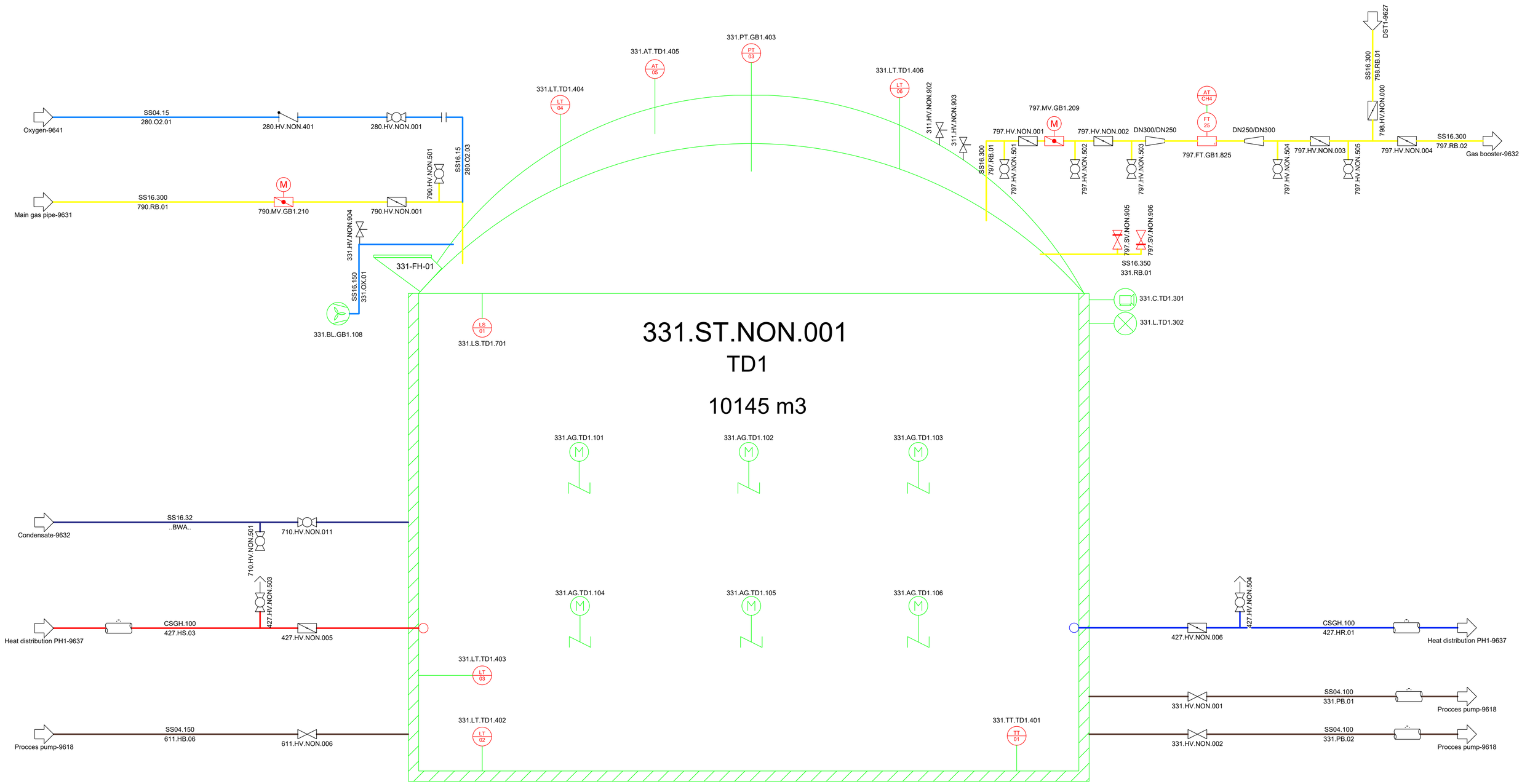

Rev. Nr.:	Rev. Dato:	Rev. Decription:

Builder: ST1

Project: SLK

Subject: Tertiary digester 1
Rev. 2

Int.: MDC | QC.CM | APP.: | Date: 26-06-2025

Project nr..1768

Drawing nr..:
9619

FORMAT: A1

LUNDSBY RENEWABLE SOLUTIONS

Lundsby Renewable Solutions A/S, Hjarbækvej 65, 8831 Løgstrup
Tlf.: +45 96 49 43 00 Info@lundsby.dk
This Drawing is subject to copywrite and may not be reproduced without permission from Lundsby Renewable Solutions A/S

Tech Building

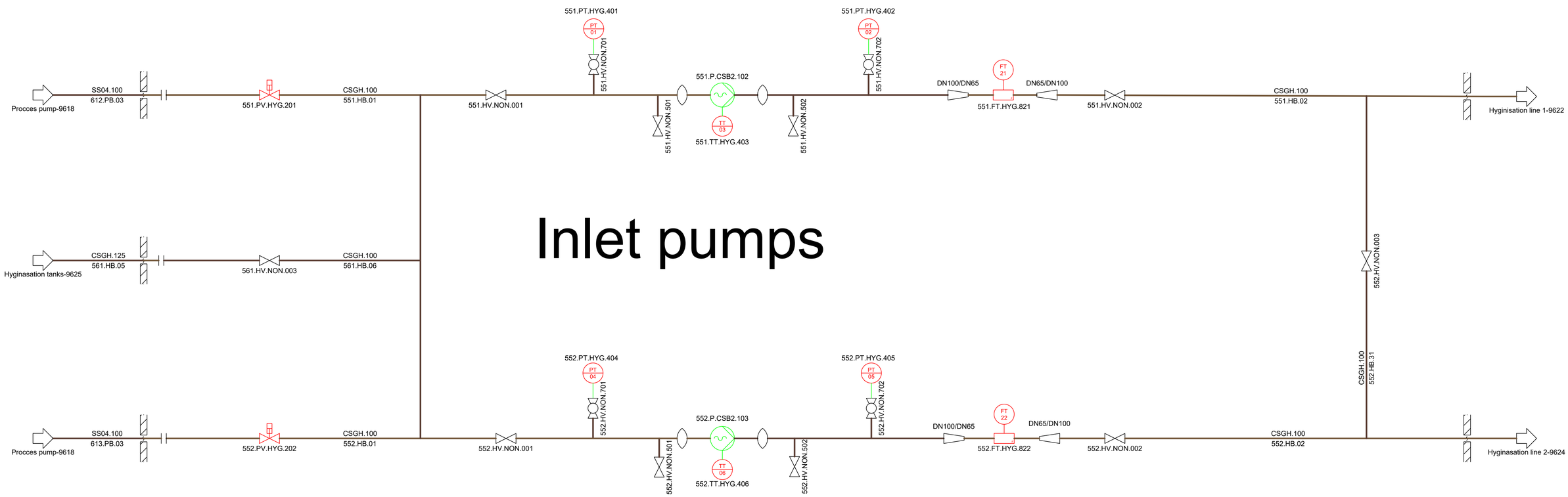

Rev. Nr.:	Rev. Dato:	Rev. Decription:

Builder:	ST		
Project:	SLK		Project nr..1768
Subject:	Hyginisation inlet pumps Rev. 2		Drawing nr..: 9620
Int.: MDC	QC.ĈM	APP.:	Date: 26-06-2025

LUNDSBY RENEWABLE SOLUTIONS

Lundsby Renewable Solutions A/S, Hjarbækvej 65, 8831 Løgstrup
Tlf.: +45 96 49 43 00 Info@lundsby.dk
This Drawing is subject to copywrite and may not be reproduced without permission from Lundsby Renewable Solutions A/S

FORMAT: A1

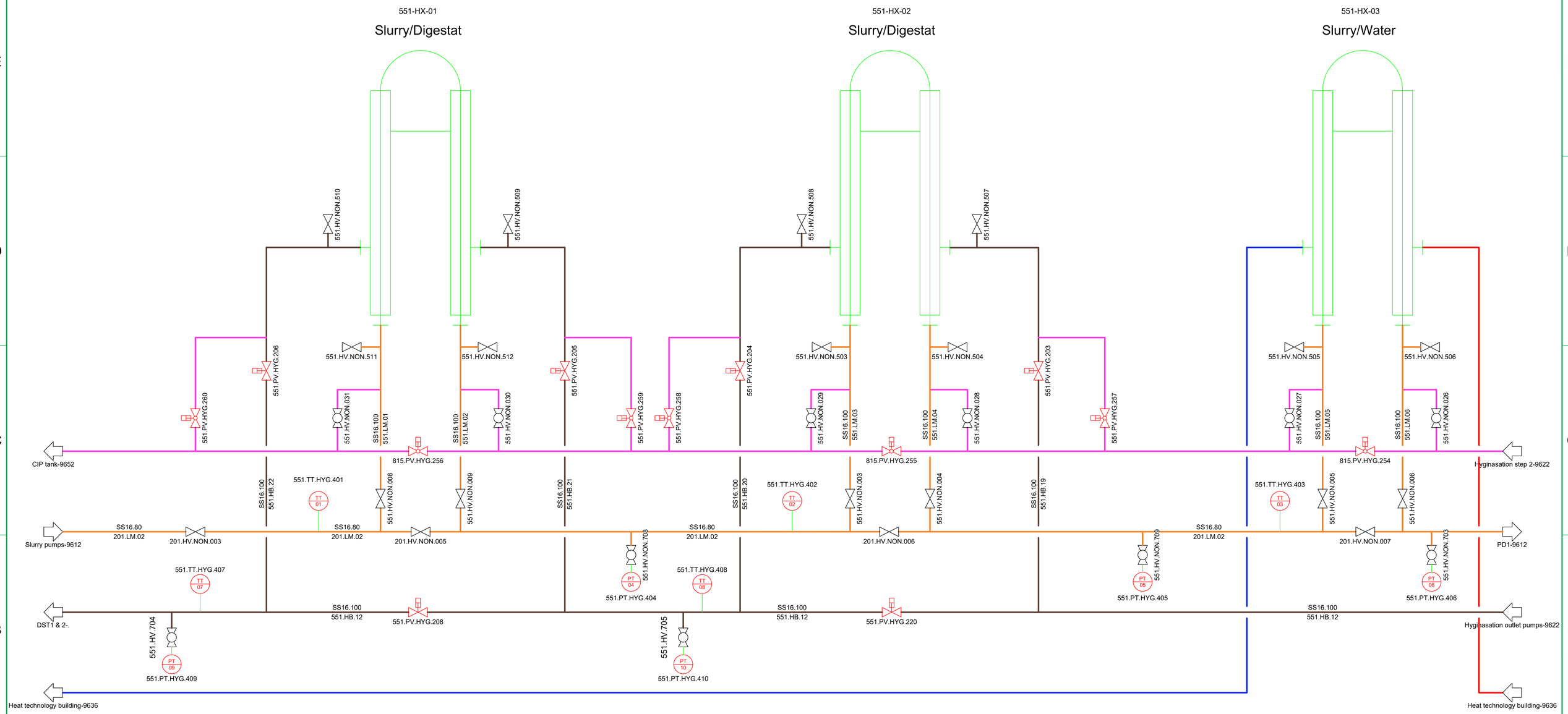

Rev. Nr.:	Rev. Dato:	Rev. Decription:

Builder: ST1

Project: SLK

Subject: Hyginasation line 1 step 1
Rev. 2

Int.: MDC | QC.CM | APP.: | Date: 26-06-2025

Project nr..: 1768

Drawing nr..:
9621

FORMAT: A1

LUNDSBY RENEWABLE SOLUTIONS
Lundsby Renewable Solutions A/S, Hjarbækvej 65, 8831 Løgstrup
Tlf.: +45 96 49 43 00 Info@lundsby.dk
This Drawing is subject to copywrite and may not be reproduced without permission from Lundsby Renewable Solutions A/S

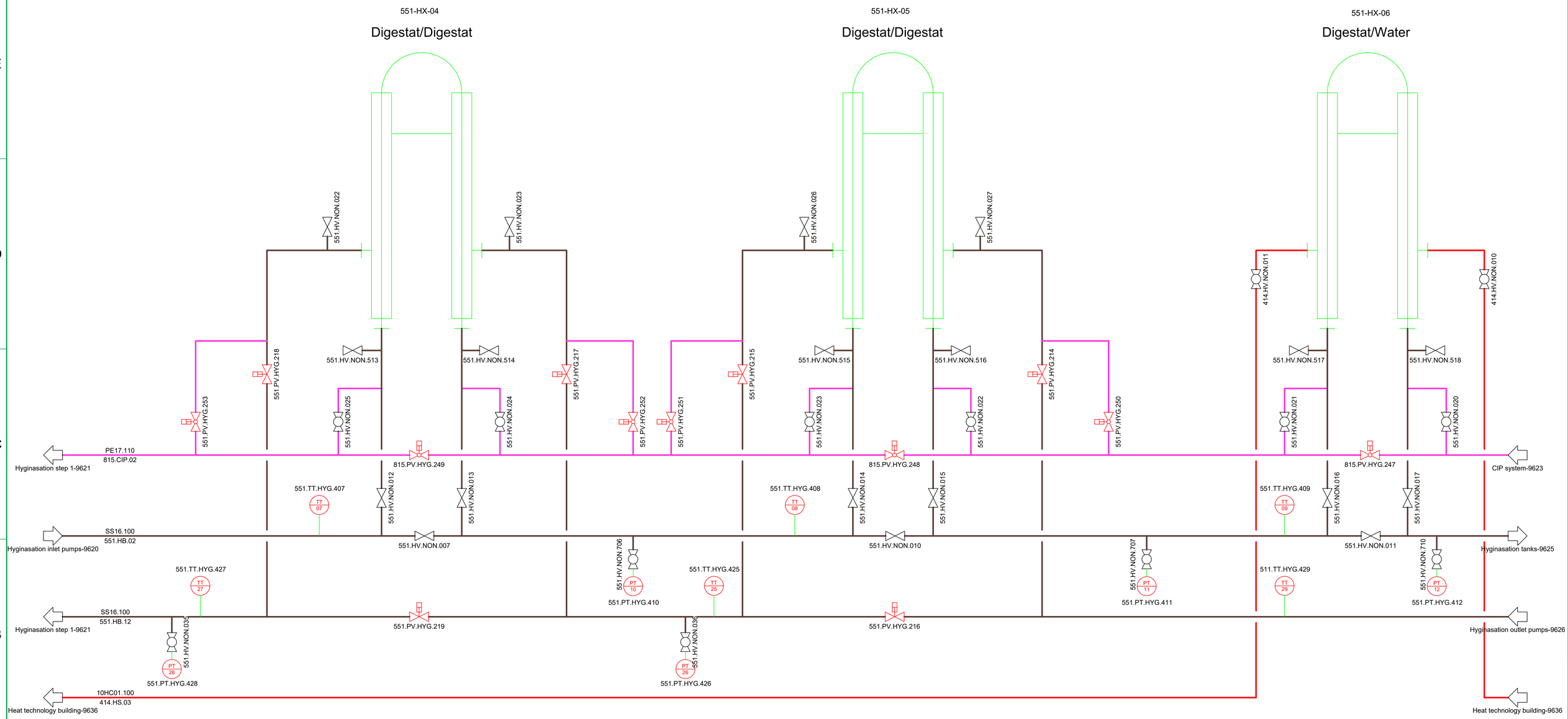

Rev. Nr.:	Rev. Dato:	Rev. Decription:

Builder: ST1

Project: SLK

Subject: Hyginasation line 1 step 2
Rev. 2

Int.: MDC | QC.CM | APP.: | Date: 26-06-2025

Project nr..: 1768

Drawing nr..:
9622

FORMAT: A1

LUNDSBY RENEWABLE SOLUTIONS
Lundsby Renewable Solutions A/S, Hjarbækvej 65, 8831 Løgstrup
Tlf.: +45 96 49 43 00 Info@lundsby.dk
This Drawing is subject to copywrite and may not be reproduced without permission from Lundsby Renewable Solutions A/S

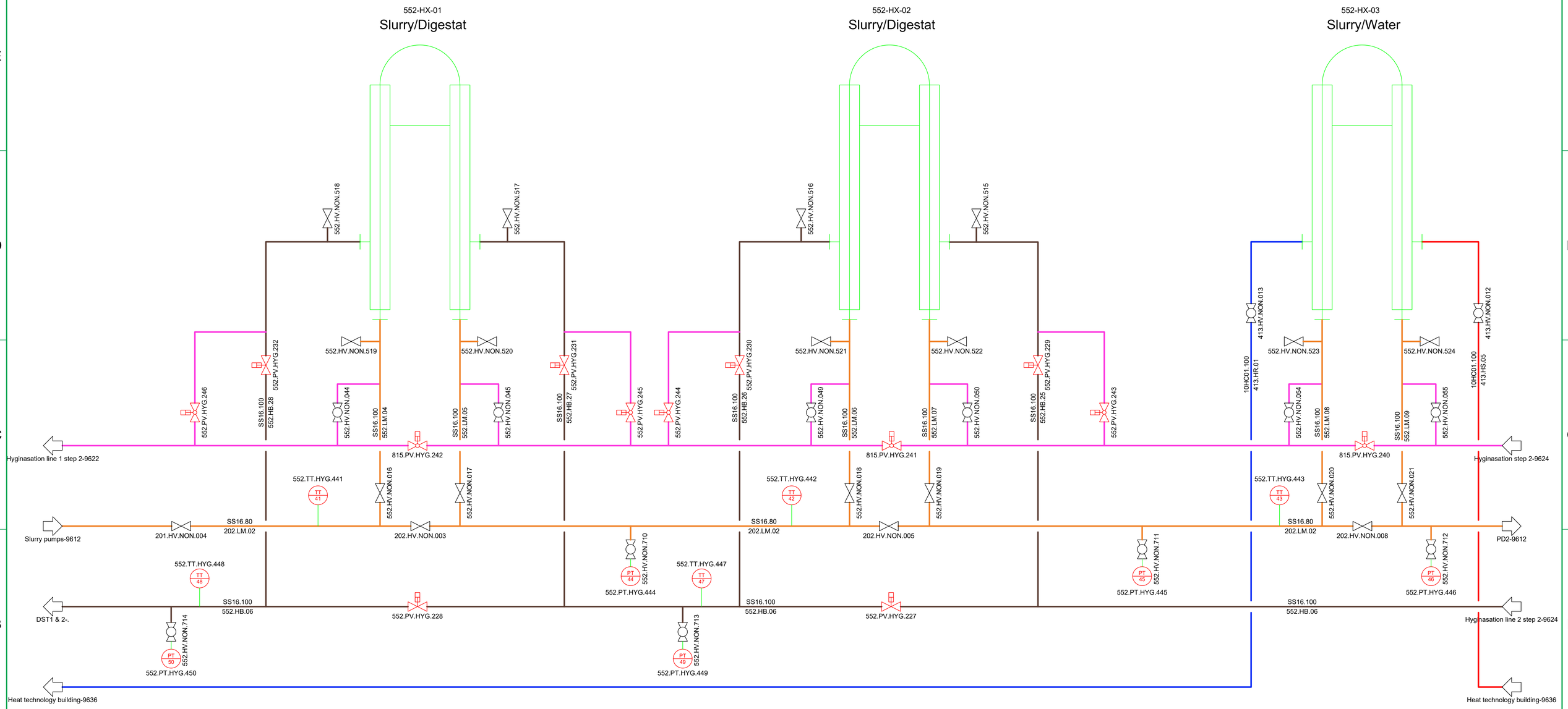

Rev. Nr.:	Rev. Dato:	Rev. Decription:

Builder: ST1

Project: SLK

Subject: Hyginasation line 2 step 1
Rev. 2

Int.: MDC | QC.CM | APP.: | Date: 26-06-2025

Project nr..1768

Drawing nr..:
9623

FORMAT: A1

LUNDSBY RENEWABLE SOLUTIONS
Lundsby Renewable Solutions A/S, Hjarbækvej 65, 8831 Løgstrup
Tlf.: +45 96 49 43 00 Info@lundsby.dk
This Drawing is subject to copywrite and may not be reproduced without permission from Lundsby Renewable Solutions A/S

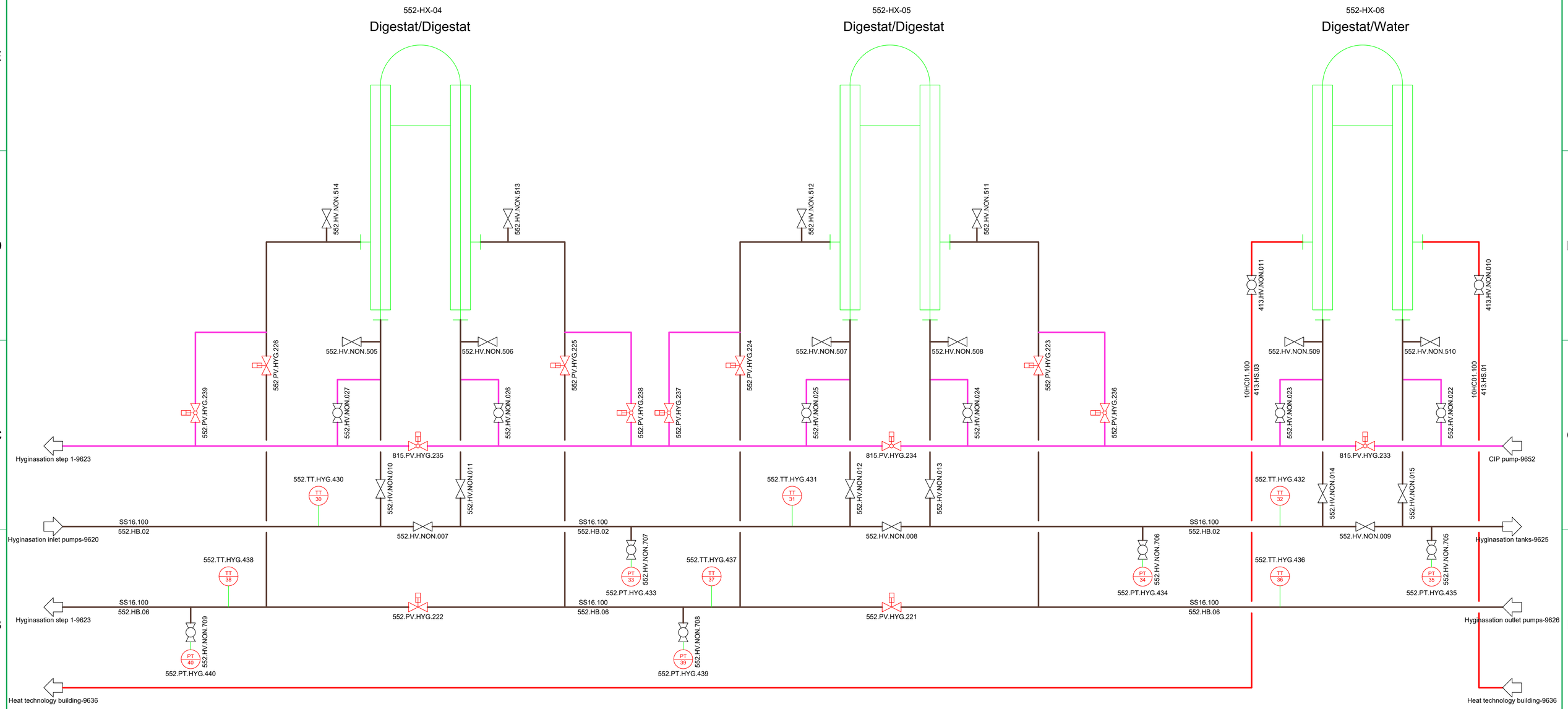

Rev. Nr.:	Rev. Dato:	Rev. Decription:

Builder: ST1

Project: SLK

Subject: Hyginasation line 2 step 2
Rev. 2

Int.: MDC | QC.CM | APP.: | Date: 26-06-2025

Project nr..: 1768

Drawing nr..:
9624

FORMAT: A1

LUNDSBY RENEWABLE SOLUTIONS
Lundsby Renewable Solutions A/S, Hjarbækvej 65, 8831 Løgstrup
Tlf.: +45 96 49 43 00 Info@lundsby.dk
This Drawing is subject to copywrite and may not be reproduced without permission from Lundsby Renewable Solutions A/S

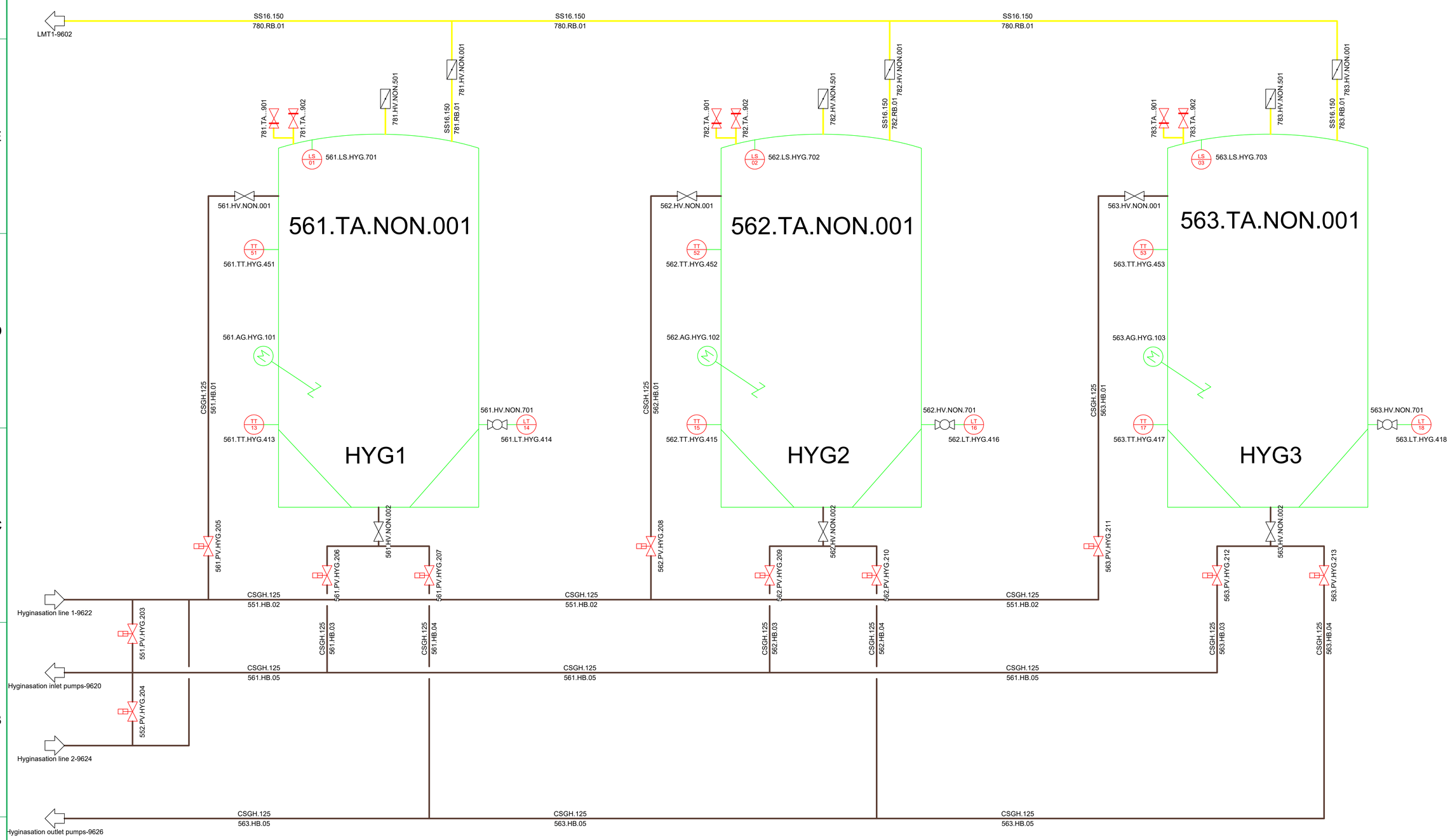

Rev. Nr.:	Rev. Dato:	Rev. Decription:

Builder:	ST1		
Project:	SLK		Project nr..1768
Subject:	Hyginasation tanks Rev. 2		Drawing nr..: 9625
Int.: MDC	QC.CM	APP.:	Date: 26-06-2025

LUNDSBY RENEWABLE SOLUTIONS
Lundsby Renewable Solutions A/S, Hjarbækvej 65, 8831 Løgstrup
Tlf.: +45 96 49 43 00 Info@lundsby.dk
This Drawing is subject to copywrite and may not be reproduced without permission from Lundsby Renewable Solutions A/S

FORMAT: A1

Tech Building

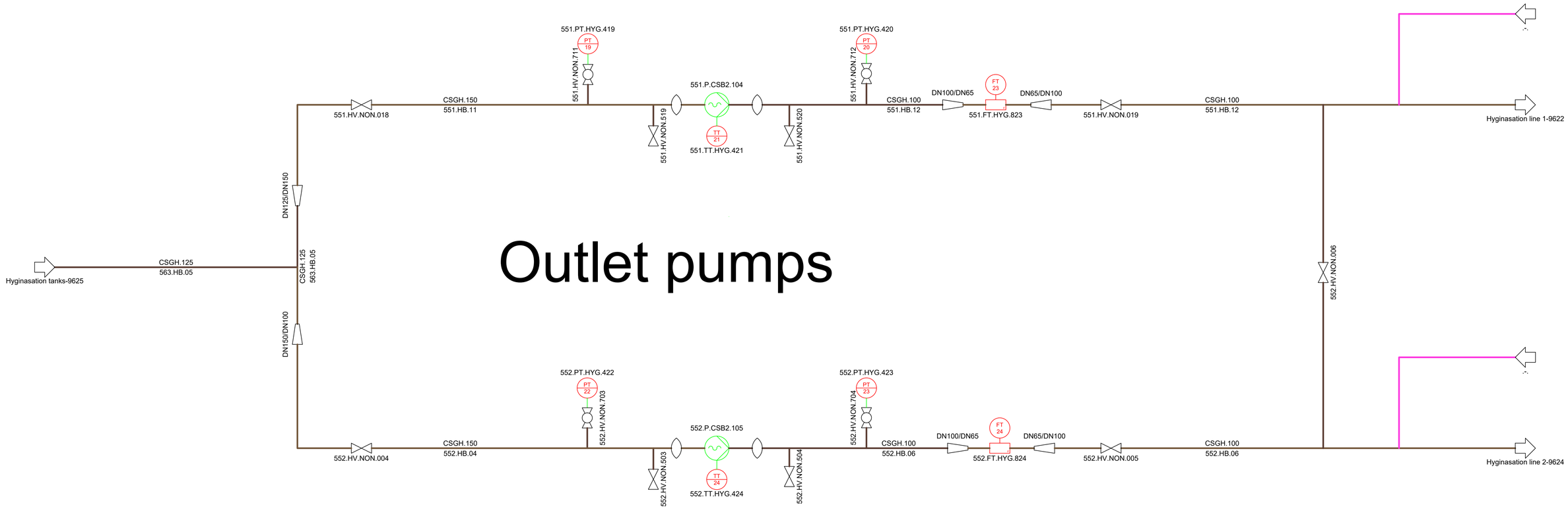

Rev. Nr.:	Rev. Dato:	Rev. Decription:

Builder: ST1

Project: SLK

Subject: Hyginasation outlet pumps
Rev. 2

Int.: MDC | QC.CM | APP.: | Date: 26-06-2025

Project nr..: 1768

Drawing nr..: 9626

LUNDSBY RENEWABLE SOLUTIONS
Lundsby Renewable Solutions A/S, Hjarbækvej 65, 8831 Løgstrup
Tlf.: +45 96 49 43 00 Info@lundsby.dk
This Drawing is subject to copywrite and may not be reproduced without permission from Lundsby Renewable Solutions A/S

FORMAT: A1

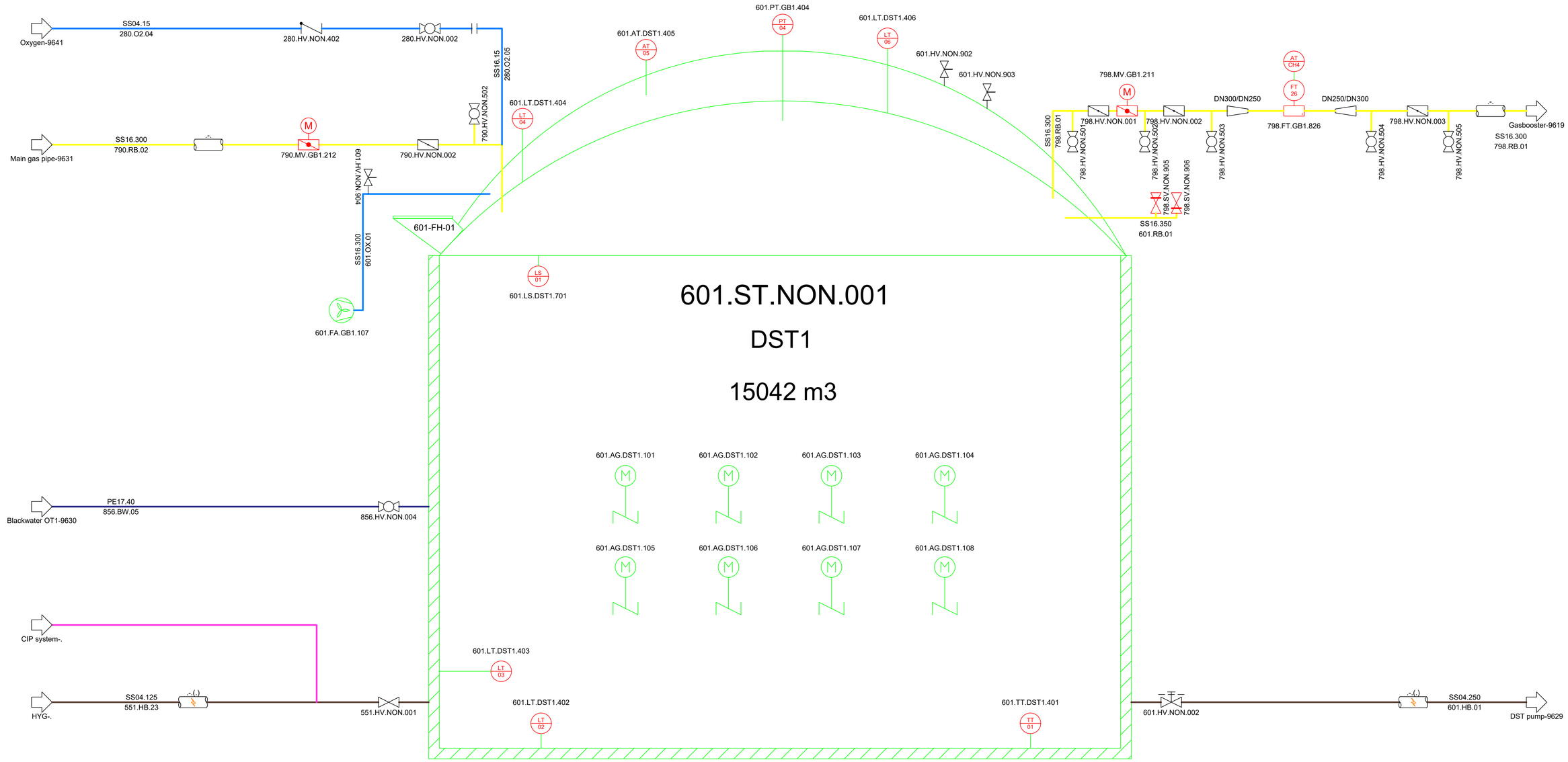

Rev. Nr.:	Rev. Dato:	Rev. Decription:

Builder:	ST1		Project nr..1768
Project:	SLK		Drawing nr..:
Subject:	Digestate Storage Tank 1 Rev. 2		9627
Int.: MDC	QC.CM	APP.:	Date: 26-06-2025

LUNDSBY RENEWABLE SOLUTIONS
Lundsby Renewable Solutions A/S, Hjarbækvej 65, 8831 Løgstrup
Tlf.: +45 96 49 43 00 Info@lundsby.dk
This Drawing is subject to copywrite and may not be reproduced without permission from Lundsby Renewable Solutions A/S

FORMAT: A1

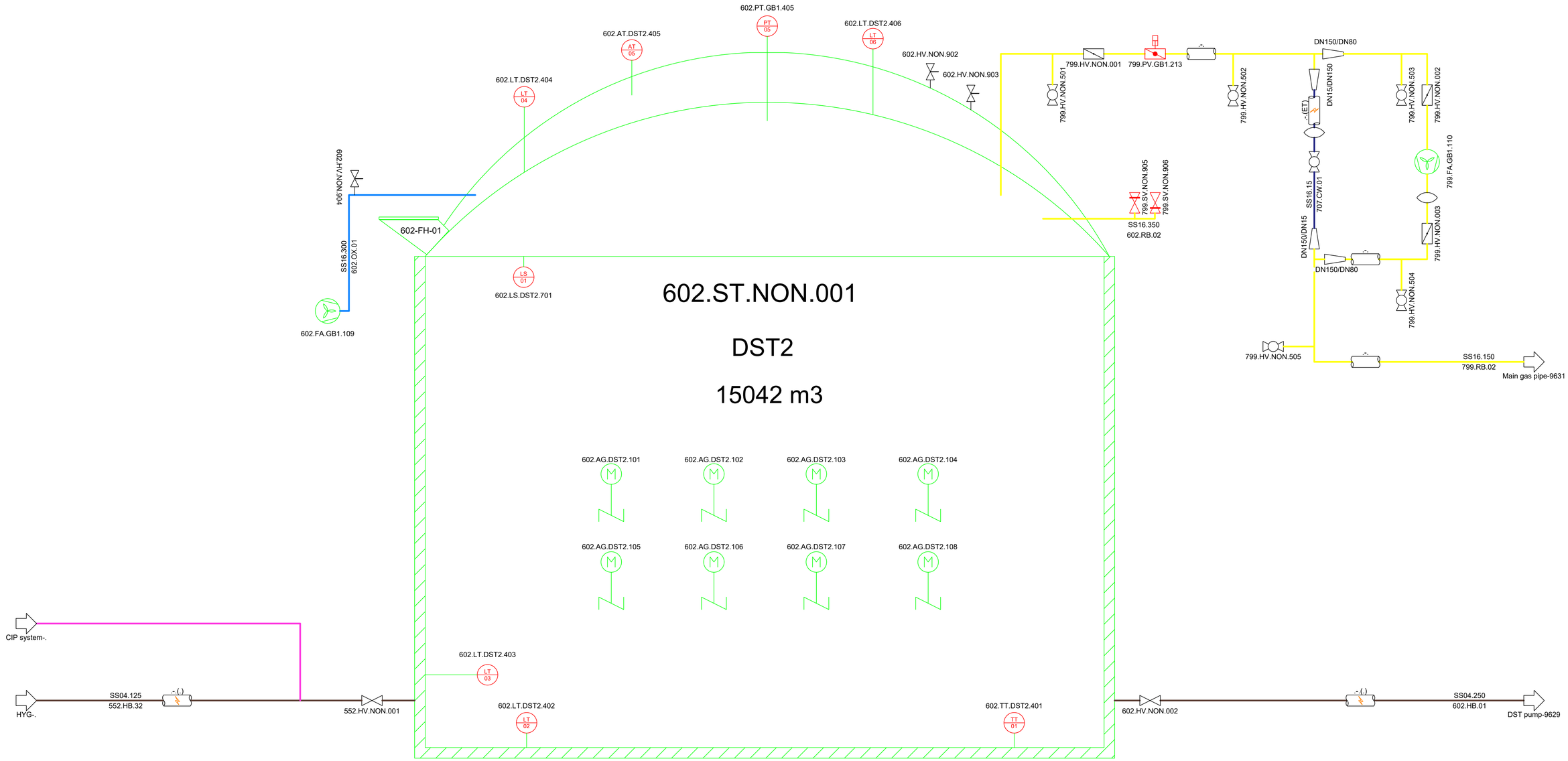

Rev. Nr.:	Rev. Dato:	Rev. Decription:

Builder: ST1

Project: SLK

Subject: Digestate Storage Tank 2
Rev. 2

Int.: MDC | QC.ĊM | APP.: | Date: 26-06-2025

Project nr..: 1768

Drawing nr..:
9628

FORMAT: A1

LUNDSBY RENEWABLE SOLUTIONS
Lundsby Renewable Solutions A/S, Hjarbækvej 65, 8831 Løgstrup
Tlf.: +45 96 49 43 00 Info@lundsby.dk
This Drawing is subject to copywrite and may not be reproduced without permission from Lundsby Renewable Solutions A/S

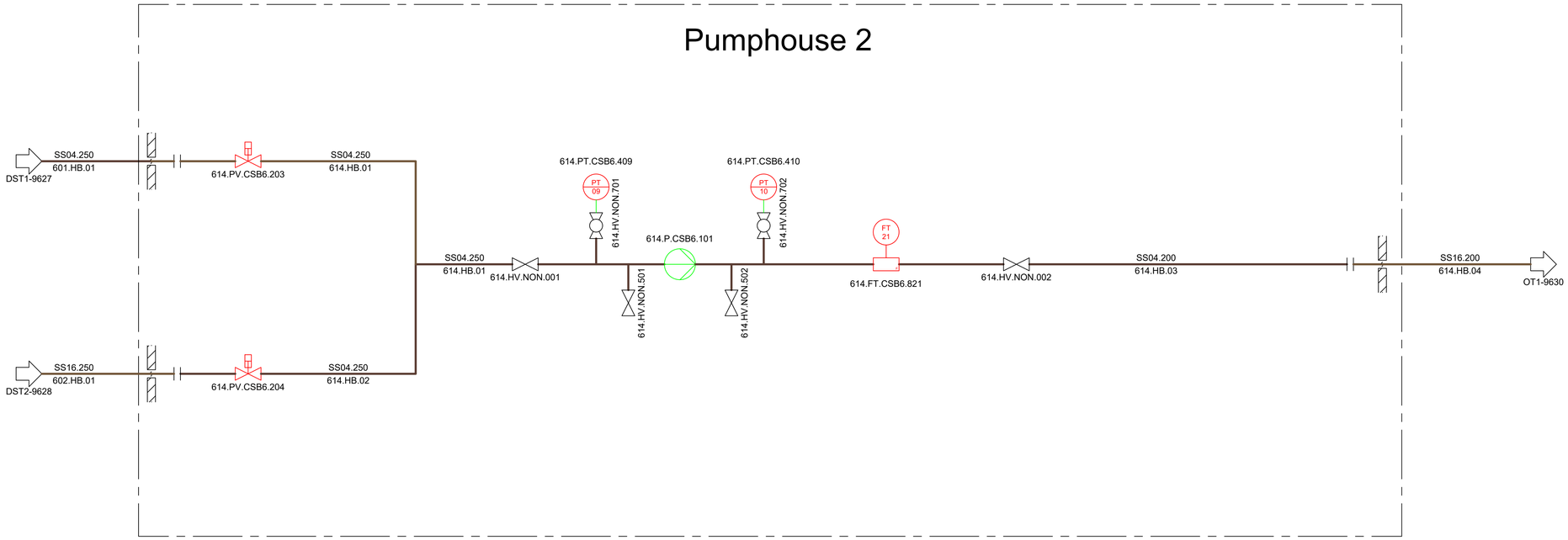

Rev. Nr.:	Rev. Dato:	Rev. Decription:

Builder: ST1

Project: SLK

Subject: DST pump
Rev. 2

Int.: MDC | QC: CM | APP.: | Date: 26-06-2025

Project nr..: 1768

Drawing nr..:
9629

LUNDSBY RENEWABLE SOLUTIONS
Lundsby Renewable Solutions A/S, Hjarbækvej 65, 8831 Løgstrup
Tlf.: +45 96 49 43 00 Info@lundsby.dk
This Drawing is subject to copywrite and may not be reproduced without permission from Lundsby Renewable Solutions A/S

FORMAT: A1

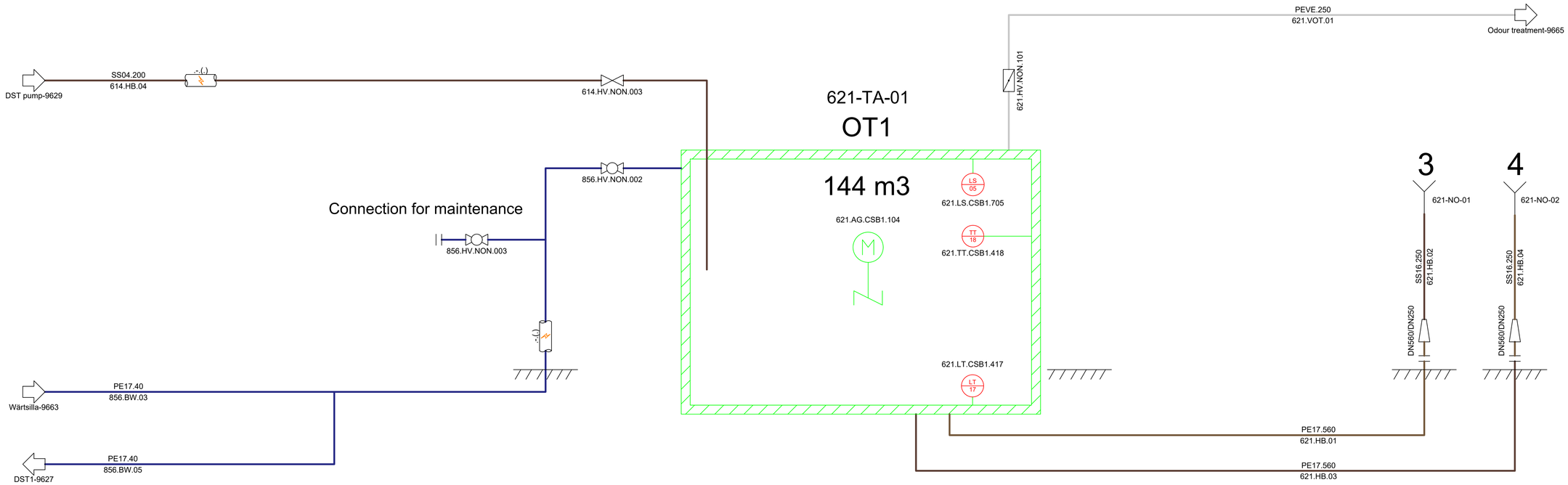

Rev. Nr.:	Rev. Dato:	Rev. Decription:

Builder: ST1

Project: SLK

Subject: Output tank 1
Rev. 2

Int.: MDC | QC.CM | APP.: | Date: 26-06-2025

Project nr..1768

Drawing nr..:
9630

LUNDSBY RENEWABLE SOLUTIONS

Lundsby Renewable Solutions A/S, Hjarbækvej 65, 8831 Løgstrup
Tlf.: +45 96 49 43 00 Info@lundsby.dk
This Drawing is subject to copywrite and may not be reproduced without permission from Lundsby Renewable Solutions A/S

FORMAT: A1

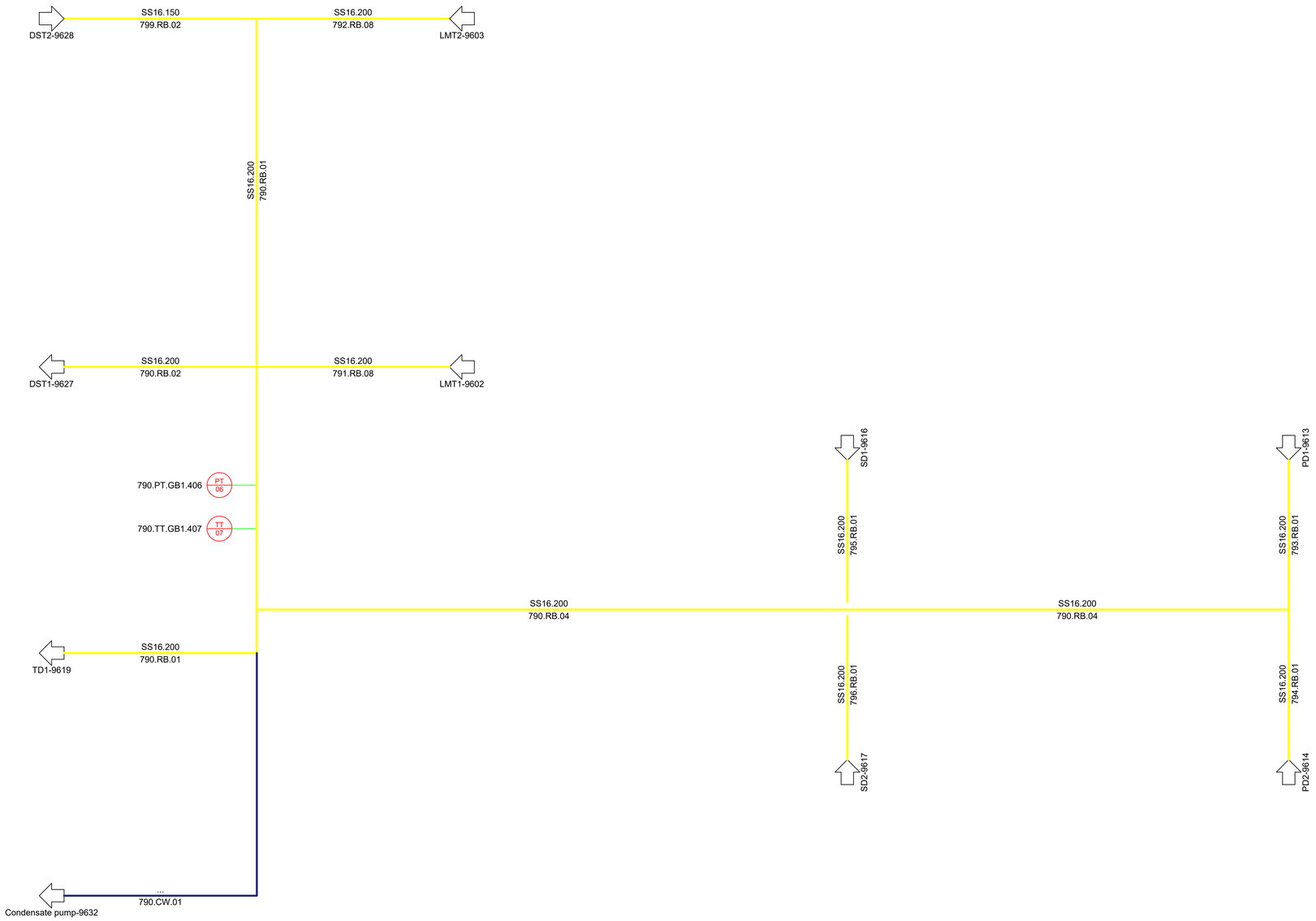

Rev. Nr.:	Rev. Dato:	Rev. Decription:

Builder: ST1

Project: SLK

Subject: Main gas pipe
Rev. 2

Int.: MDC | QC.: CM | APP.: | Date: 26-06-2025

Project nr..: 1768

Drawing nr..:
9631

LUNDSBY RENEWABLE SOLUTIONS
Lundsby Renewable Solutions A/S, Hjarbækvej 65, 8831 Løgstrup
Tlf.: +45 96 49 43 00 Info@lundsby.dk
This Drawing is subject to copywrite and may not be reproduced without permission from Lundsby Renewable Solutions A/S

FORMAT: A1

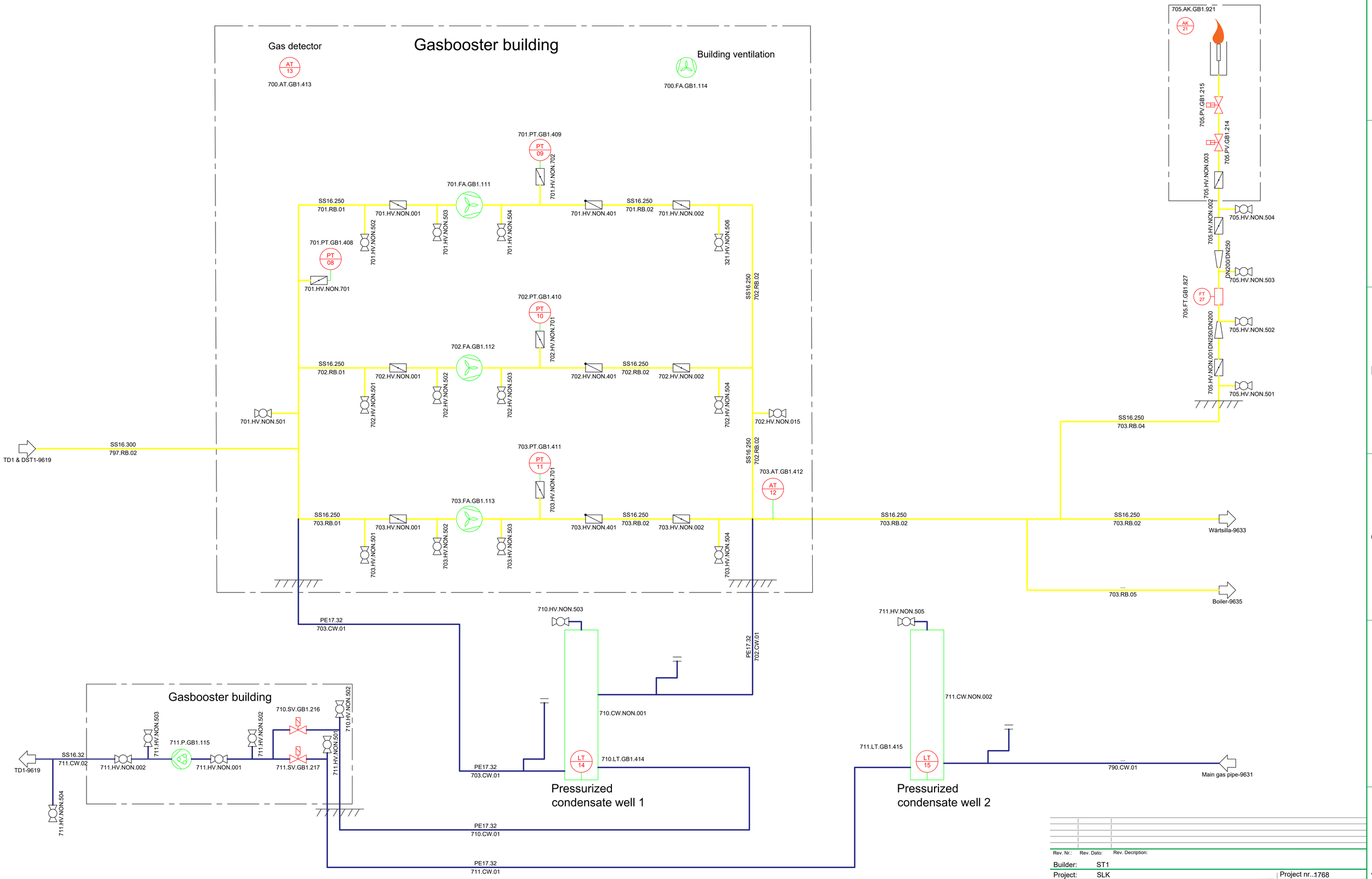

Rev. Nr.:	Rev. Dato:	Rev. Decription:

Builder:	ST1		
Project:	SLK		Project nr..1768
Subject:	Gas booster and flare Rev. 2		Drawing nr..: 9632
Int.: MDC	QC.CM	APP.:	Date: 26-06-2025

LUNDSBY RENEWABLE SOLUTIONS

Lundsby Renewable Solutions A/S, Hjarbækvej 65, 8831 Løgstrup
Tlf.: +45 96 49 43 00 Info@lundsby.dk
This Drawing is subject to copywrite and may not be reproduced without permission from Lundsby Renewable Solutions A/S

FORMAT: A1

Wärtsillä

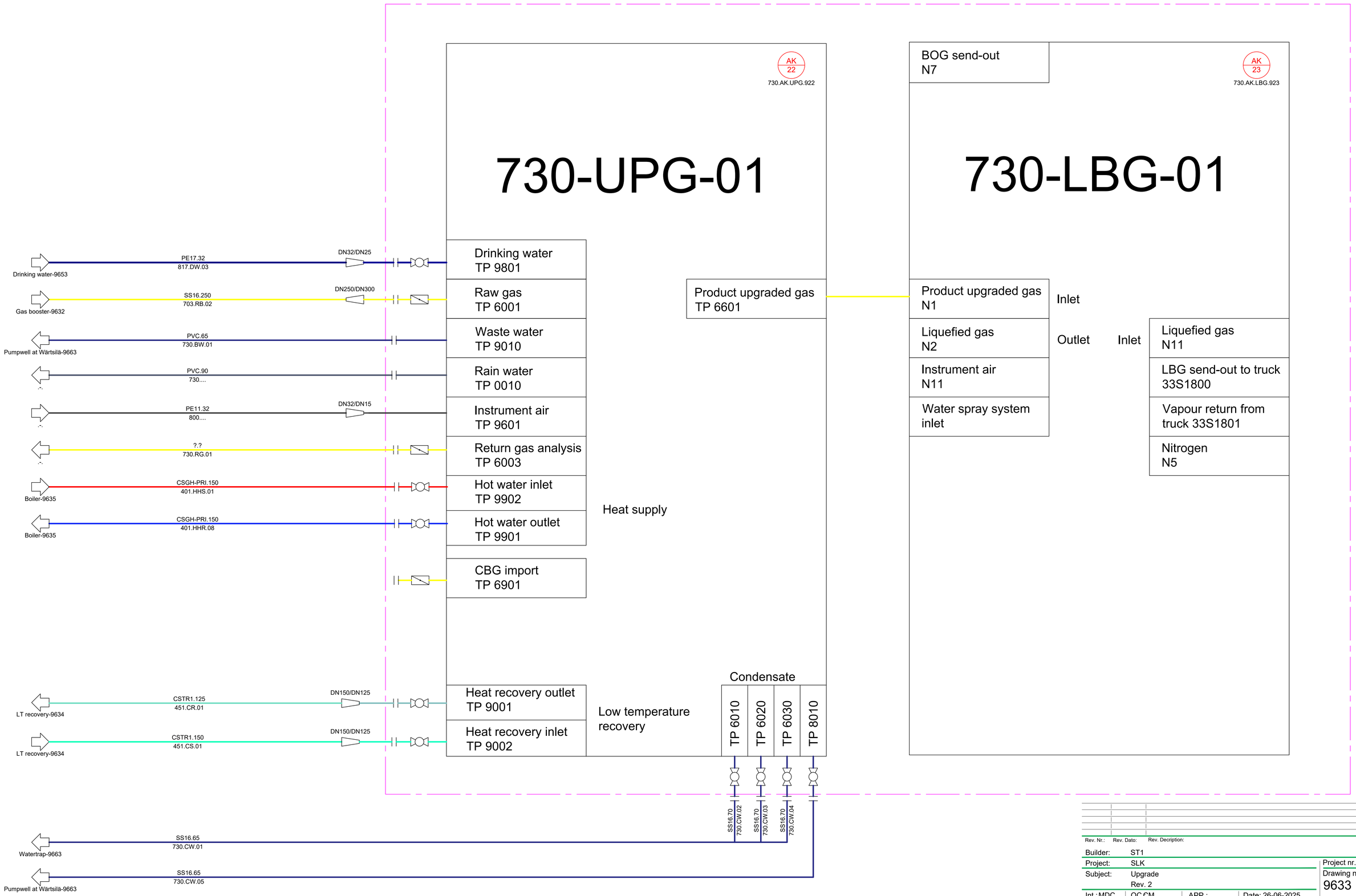

Rev. Nr.:	Rev. Dato:	Rev. Decription:

Builder:	ST1		
Project:	SLK		Project nr..:1768
Subject:	Upgrade Rev. 2		Drawing nr..: 9633
Int.: MDC	QC.CM	APP.:	Date: 26-06-2025

LUNDSBY RENEWABLE SOLUTIONS
Lundsby Renewable Solutions A/S, Hjarbækvej 65, 8831 Løgstrup
Tlf.: +45 96 49 43 00 Info@lundsby.dk
This Drawing is subject to copywrite and may not be reproduced without permission from Lundsby Renewable Solutions A/S

FORMAT: A1

Heat pump scope

Technology building

Lundsby scope

Buffertank 12000 L

401.TA.001

401.TT.CSB2.803

401.TT.CSB2..04

401.TT.CSB2..05

401.TT.CSB2..06

Heat distribution tech-building-9636

411.HV.NON.001

10HC01.125
411.HS.01

401-PT-01

401-HV-18

401-HV-19

EXP

EXP

?-?-02

401-HV-17

451-FA-01

To outside

From outside

CSTR.65
401.HR.02

CSTR.65
401.HR.03

401.HV.NON.003

401.HV.NON.004

DN80/DN65

10HC01.125
411.HR.01

Heat distribution tech-building-9636

401.HV.NON.002

401.HV.NON.005

CSTR.80
401.HR.01

CSTR.80
401.HR.04

401.HV.NON.006

401.HV.NON.007

401.HV.NON.008

401.HV.NON.009

401.P.CSB2.101

401.HV.NON.010

401.HV.NON.011

401.HV.501

CSTR.80
401.HR.07

DN32/DN80

401-HV-15

401-HV-16

401-AV-03

Volumetank 4000 L

451-HV-12

451-HV-13

Heat pump 2 (slave)

Heat pump 1 (master)

911-AK-03

911-AK-02

911-AK-01

?-FT-02

?-FT-01

451-HV-01

451-HV-02

451-HV-03

451-HV-04

451-P-02

451-P-01

DN/OD80-CSTR
?-CS-05

DN/OD80-CSTR1
?-CS-03

451-HV-08

451-HV-07

451-HV-06

451-HV-05

451-HV-11

451-RV-01

451-HV-14

Lundsby scope

?-ET-01

451-HV-17

451-TT-01

451-TT-02

451-HV-15

451-HV-16

451-HX-01

CSTR1.150
451.CS.01

CSTR1.150
451.CR.01

451-TT-03

451.HV.NON.001

LT recovery-9633

451.HV.NON.002

LT recovery-9633

N-14

Rev. Nr.:	Rev. Dato:	Rev. Beskrivelse:

Builder: ST1

Project: SLK

Subject: Heat pumps
Rev. 2

Int.:MDC | QC: CM | APP.: | Date: 26-06-2025

Project nr.:1768

Drawing nr.: 9634

LUNDSBY RENEWABLE SOLUTIONS

Lundsby Biogas A/S, Hjarbækvej 65, 8831 Løgstrup
Tlf.: +45 96 49 43 00 Info@lundsbybiogas.dk

Denne tegning er underlagt copywrite op må ikke reproduceres uden tilladelse fra Lundsbybiogas A/S

FORMAT: A1

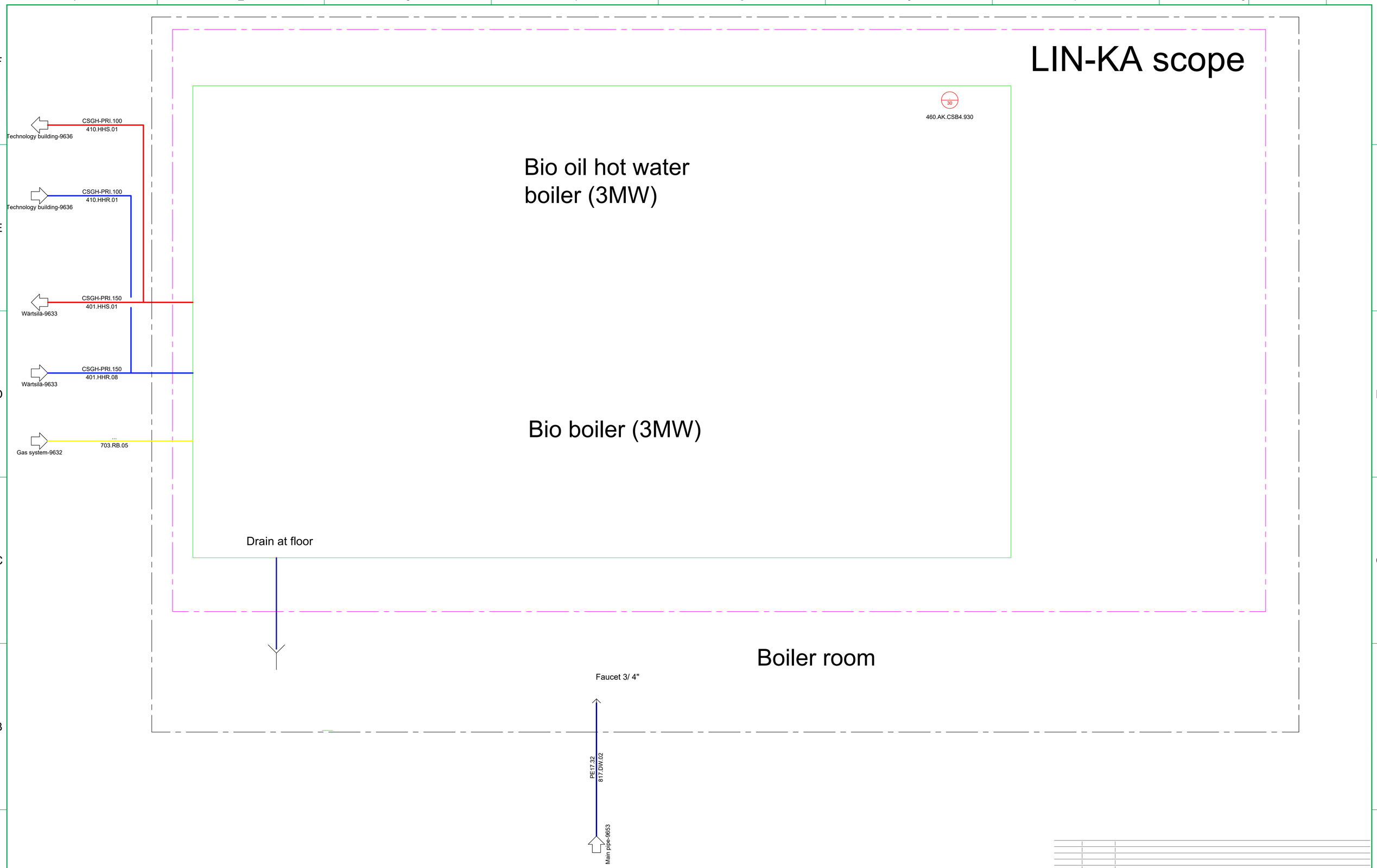

Rev. Nr.:	Rev. Dato:	Rev. Beskrivelse:

Builder:	ST1		
Project:	SLK		Project nr.: 1768
Subject:	Boiler room Rev. 2		Drawing nr.: 9635
Int.:MDC	QC: CM	APP.:	Date: 26-06-2025

LUNDSBY RENEWABLE SOLUTIONS
Lundsby Biogas A/S, Hjarbækvej 65, 8831 Løgstrup
Tlf.: +45 96 49 43 00 Info@lundsbybiogas.dk
Denne tegning er underlagt copyvritte op må ikke reproduceres unden tilladelse fra Lundsbybiogas A/S

FORMAT: A1

Heat technology building

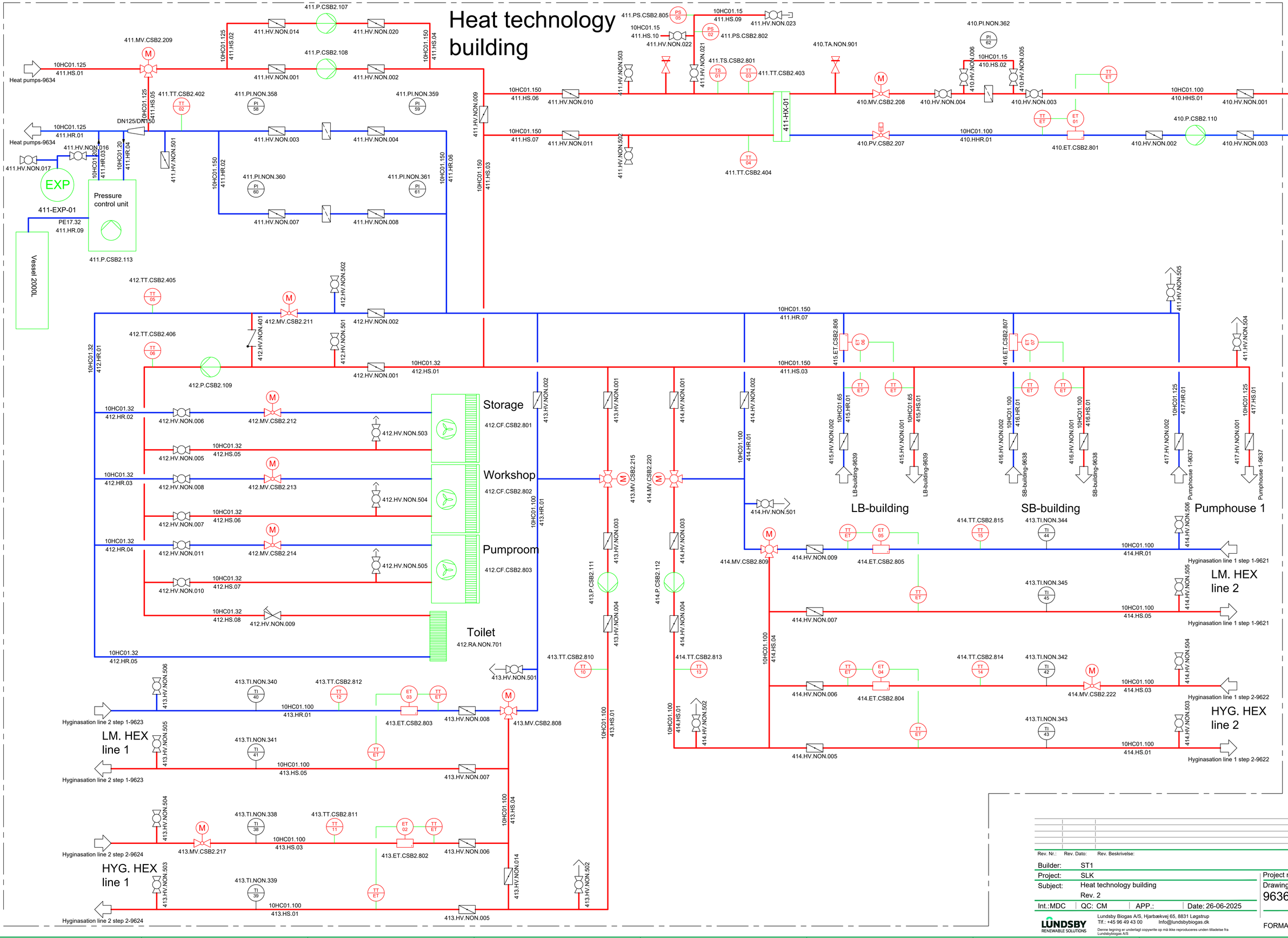

Rev. Nr.:	Rev. Dato:	Rev. Beskrivelse:

Builder: ST1
Project: SLK
Subject: Heat technology building
Rev. 2

Int.:MDC | QC: CM | APP.: | Date: 26-06-2025

Project nr.: 1768
Drawing nr.: 9636

LUNDSBY RENEWABLE SOLUTIONS
Lundsby Biogas A/S, Hjarbækvej 65, 8831 Løgstrup
Tlf.: +45 96 49 43 00 Info@lundsbybiogas.dk
Denne tegning er underlagt copywrite op må ikke reproduceres uden tilladelse fra Lundsbybiogas A/S

FORMAT: A1

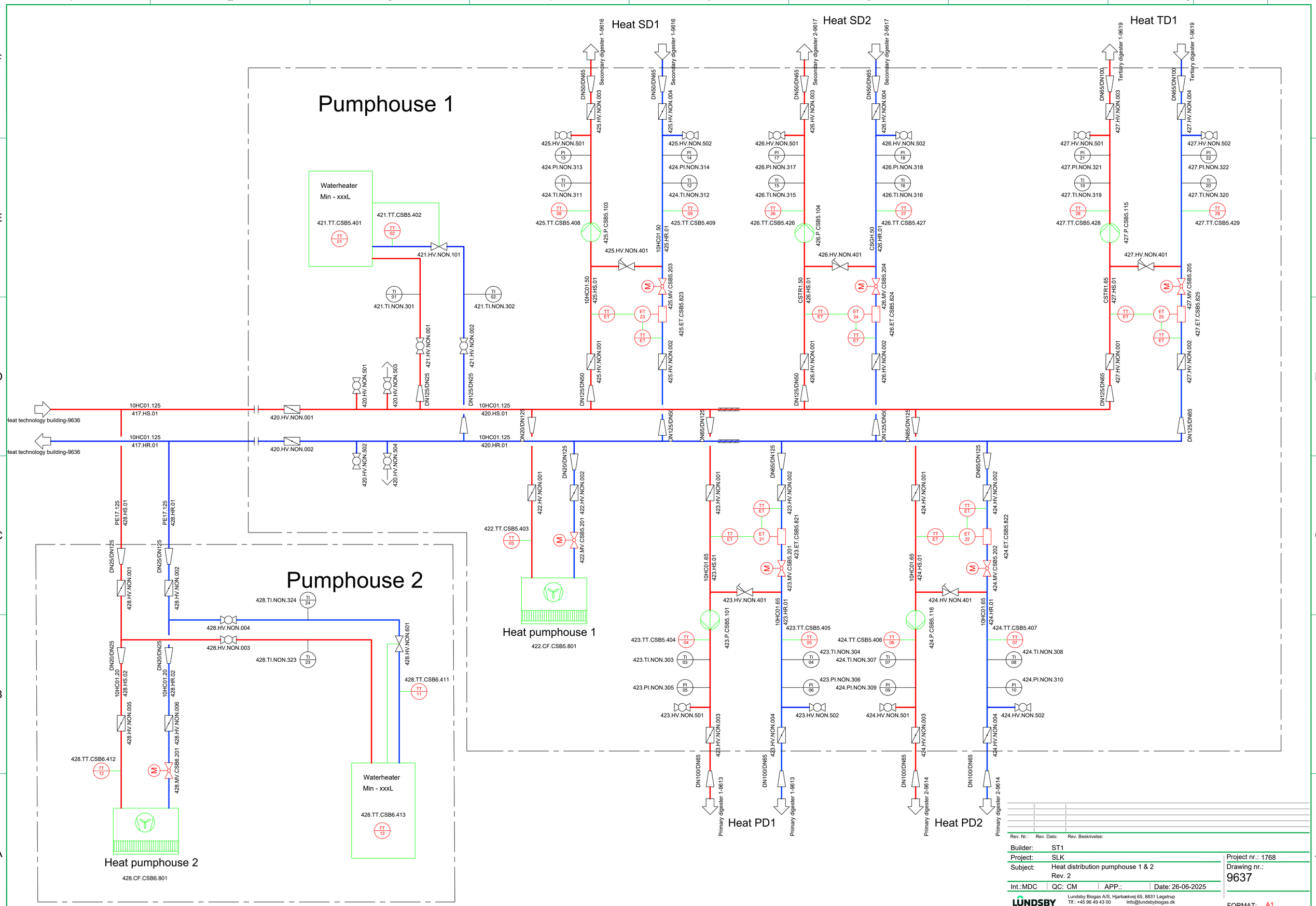

Rev. Nr.:	Rev. Dato:	Rev. Beskrivelse:

Builder:	ST1		
Project:	SLK		Project nr.: 1768
Subject:	Heat distribution pumphouse 1 & 2 Rev. 2		Drawing nr.: 9637
Int.:MDC	QC: CM	APP.:	Date: 26-06-2025

LUNDSBY RENEWABLE SOLUTIONS

Lundsby Biogas A/S, Hjarbækvej 65, 8831 Løgstrup
Tlf.: +45 96 49 43 00 Info@lundsbybiogas.dk

Denne tegning er underlagt copywrite op må ikke reproduceres uden tilladelse fra Lundsbybiogas A/S

FORMAT: A1

SB-Building

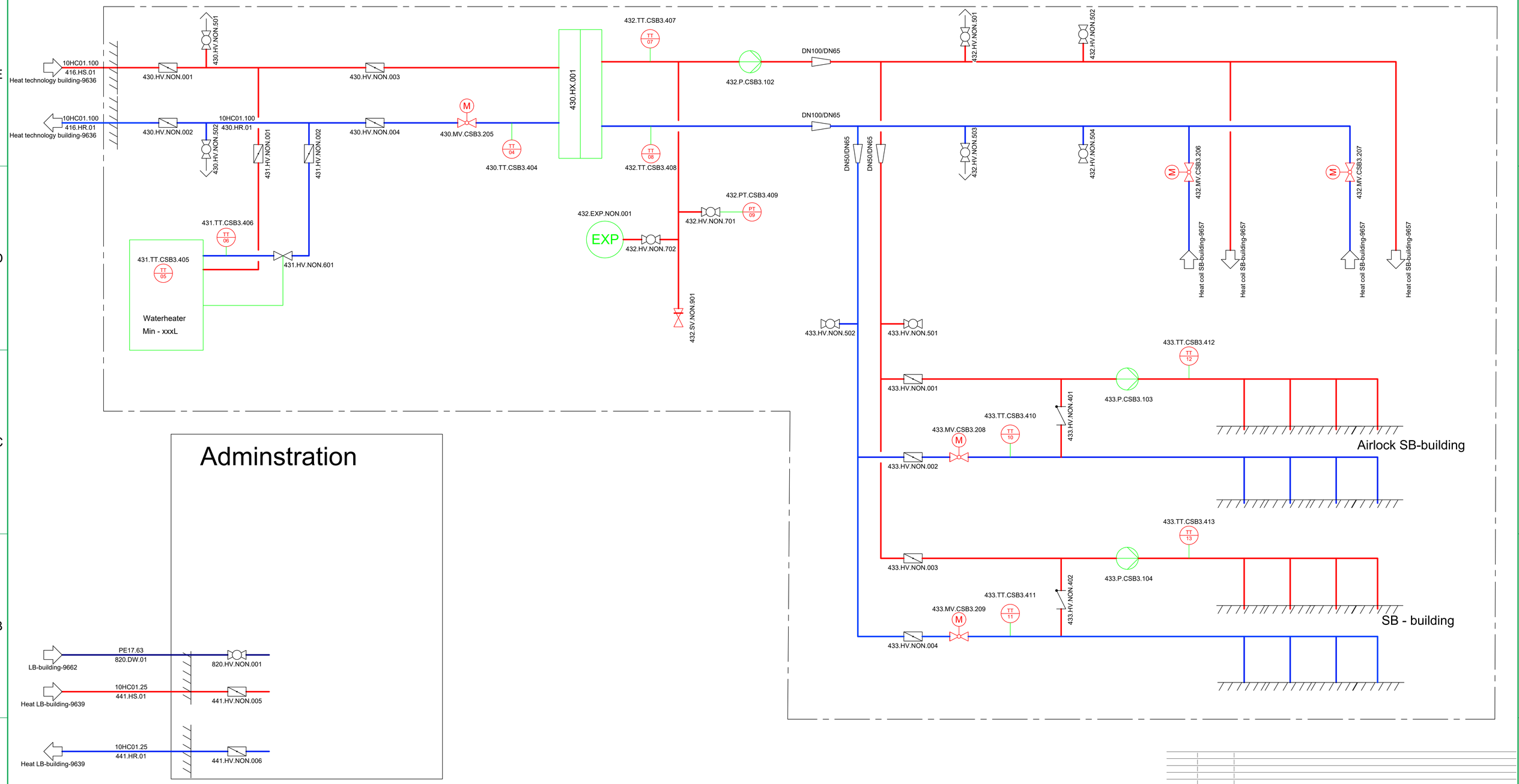

Rev. Nr.:	Rev. Dato:	Rev. Beskrivelse:

Builder:	ST1		
Project:	SLK		Project nr.: 1768
Subject:	Heat distribution SB-building Rev. 2		Drawing nr.: 9638
Int.:MDC	QC: CM	APP.:	Date: 26-06-2025

LUNDSBY RENEWABLE SOLUTIONS

Lundsby Biogas A/S, Hjarbækvej 65, 8831 Løgstrup
Tlf.: +45 96 49 43 00 Info@lundsbybiogas.dk

Denne tegning er underlagt copywrite og må ikke reproduceres uden tilladelse fra Lundsbybiogas A/S

FORMAT: A1

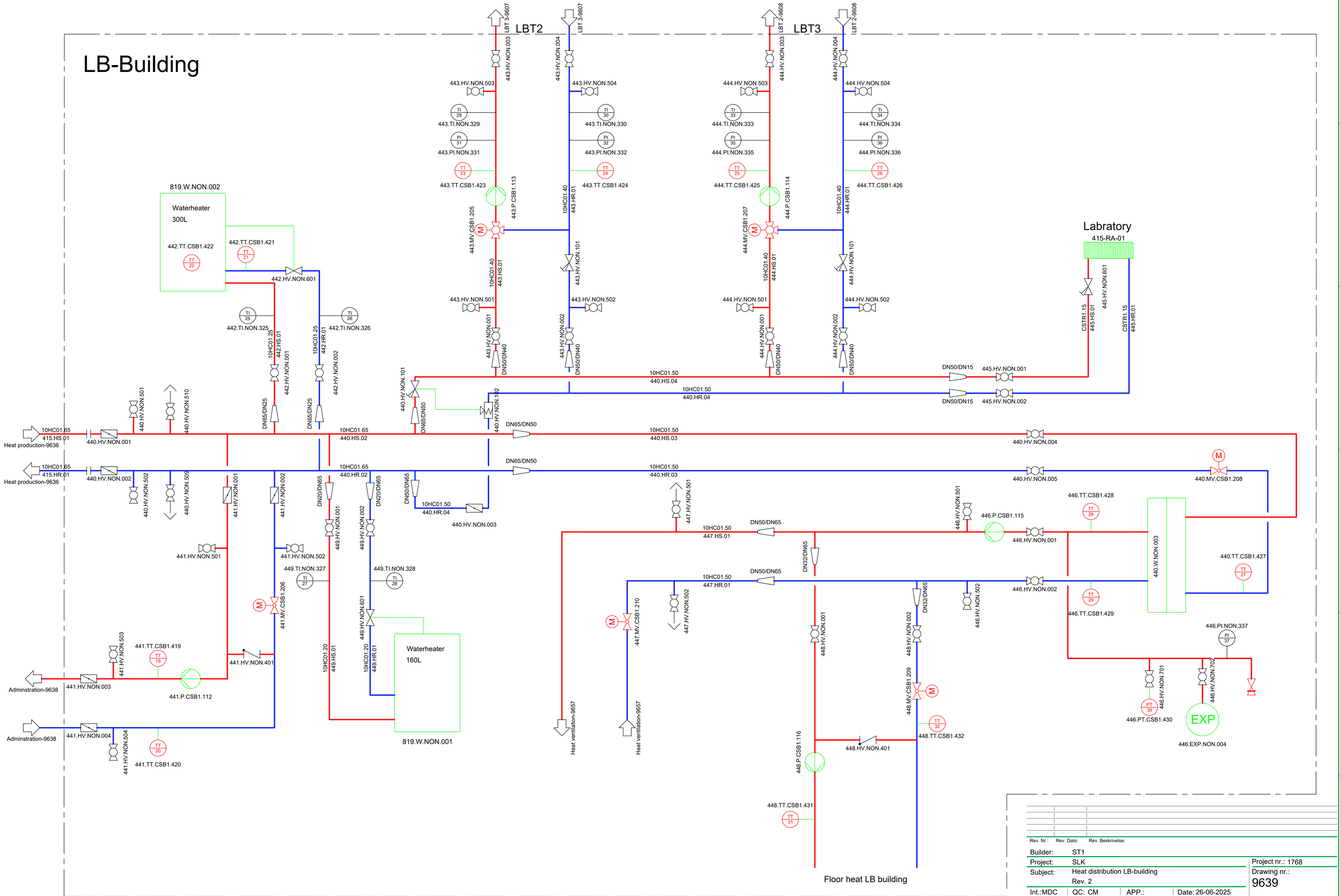

Rev. Nr.:	Rev. Dato:	Rev. Beskrivelse:

Builder: ST1
Project: SLK
Subject: Heat distribution LB-building
Rev. 2

Int.:MDC | QC: CM | APP.: | Date: 26-06-2025

Project nr.: 1768
Drawing nr.: 9639

LUNDSBY RENEWABLE SOLUTIONS

Lundsby Biogas A/S, Hjarbækvej 65, 8831 Løgstrup
Tlf.: +45 96 49 43 00 Info@lundsbybiogas.dk

Denne tegning er underlagt copyvrite op må ikke reproduceres uden tilladelse fra Lundsbybiogas A/S

FORMAT: A1

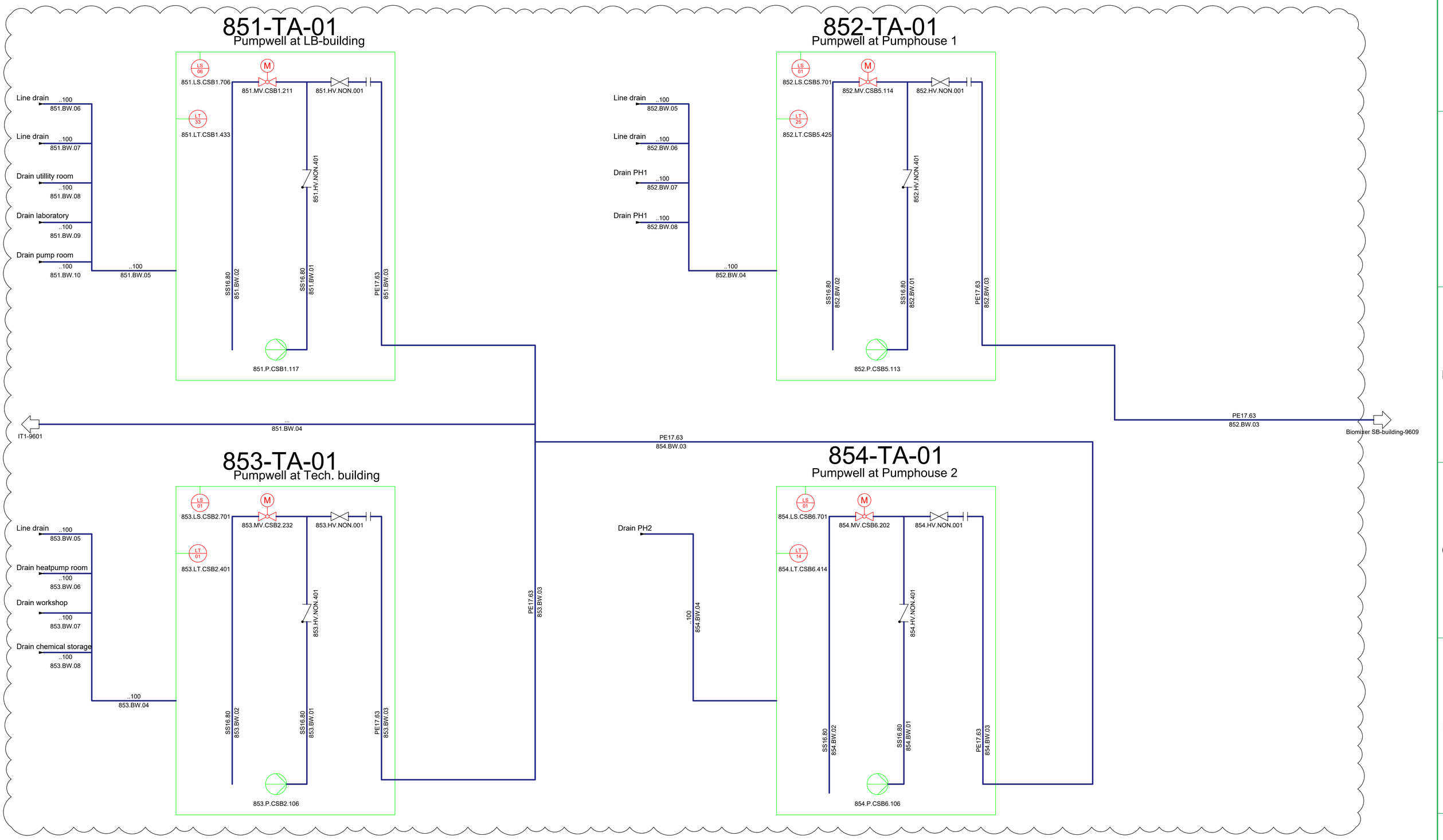

Rev. Nr.:	Rev. Dato:	Rev. Decription:

Builder: ST1

Project: SLK

Subject: Blackwater wells
Rev. 2

Int.: MDC | QC.CM | APP.: | Date: 26-06-2025

Project nr..1768

Drawing nr..:
9640

LUNDSBY RENEWABLE SOLUTIONS

Lundsby Renewable Solutions A/S, Hjarbækvej 65, 8831 Løgstrup
Tlf.: +45 96 49 43 00 Info@lundsby.dk
This Drawing is subject to copywrite and may not be reproduced without permission from Lundsby Renewable Solutions A/S

FORMAT: A1

Pumphouse 1
JA Trykluft scope

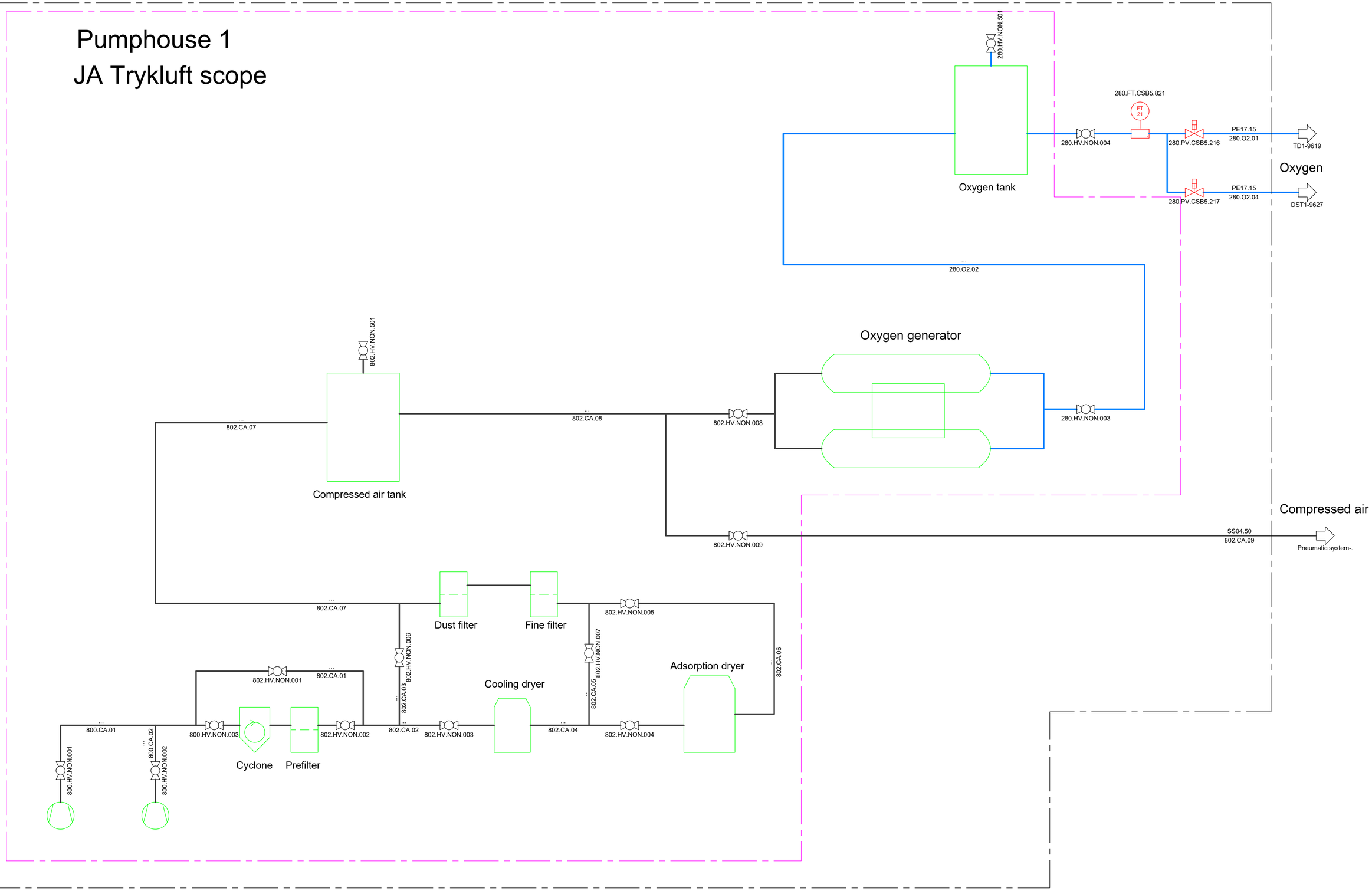

Rev. Nr.:	Rev. Dato:	Rev. Decription:

Builder:	ST1		
Project:	SLK		Project nr..1768
Subject:	Compressed air & Oxygen Rev. 2		Drawing nr..: 9641
Int.: MDC	QC.CM	APP.:	Date: 26-06-2025

LUNDSBY RENEWABLE SOLUTIONS
Lundsby Renewable Solutions A/S, Hjarbækvej 65, 8831 Løgstrup
Tlf.: +45 96 49 43 00 Info@lundsby.dk

This Drawing is subject to copywrite and may not be reproduced without permission from Lundsby Renewable Solutions A/S

FORMAT: A1

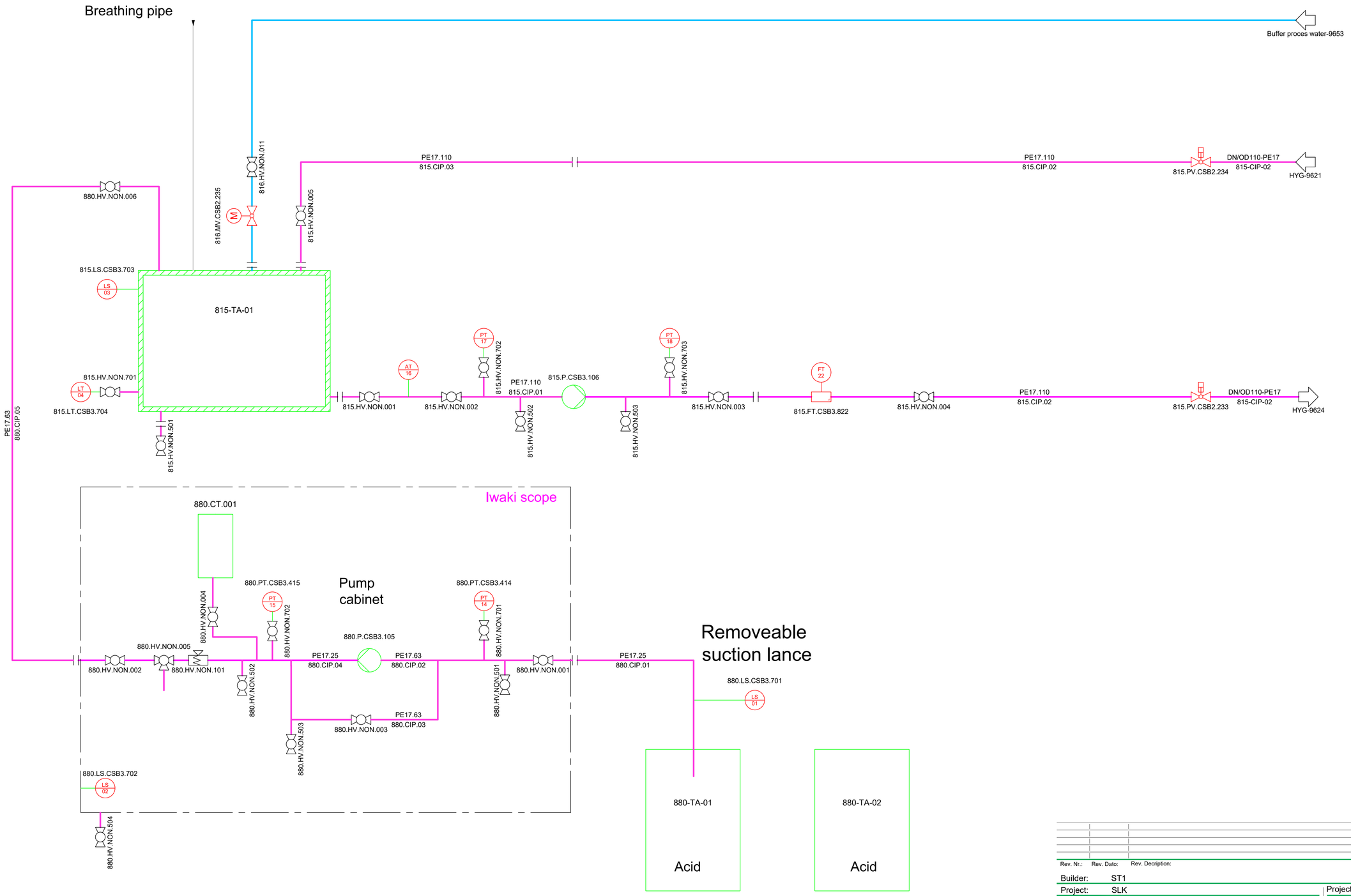

Rev. Nr.:	Rev. Dato:	Rev. Decription:

Builder:	ST1
Project:	SLK
Subject:	CIP facility Rev. 2
Int.: MDC	QC.CM
APP.:	Date: 26-06-2025

Project nr..:1768

Drawing nr..:
9652

FORMAT: A1

LUNDSBY RENEWABLE SOLUTIONS
Lundsby Renewable Solutions A/S, Hjarbækvej 65, 8831 Løgstrup
Tlf.: +45 96 49 43 00 Info@lundsby.dk
This Drawing is subject to copywrite and may not be reproduced without permission from Lundsby Renewable Solutions A/S

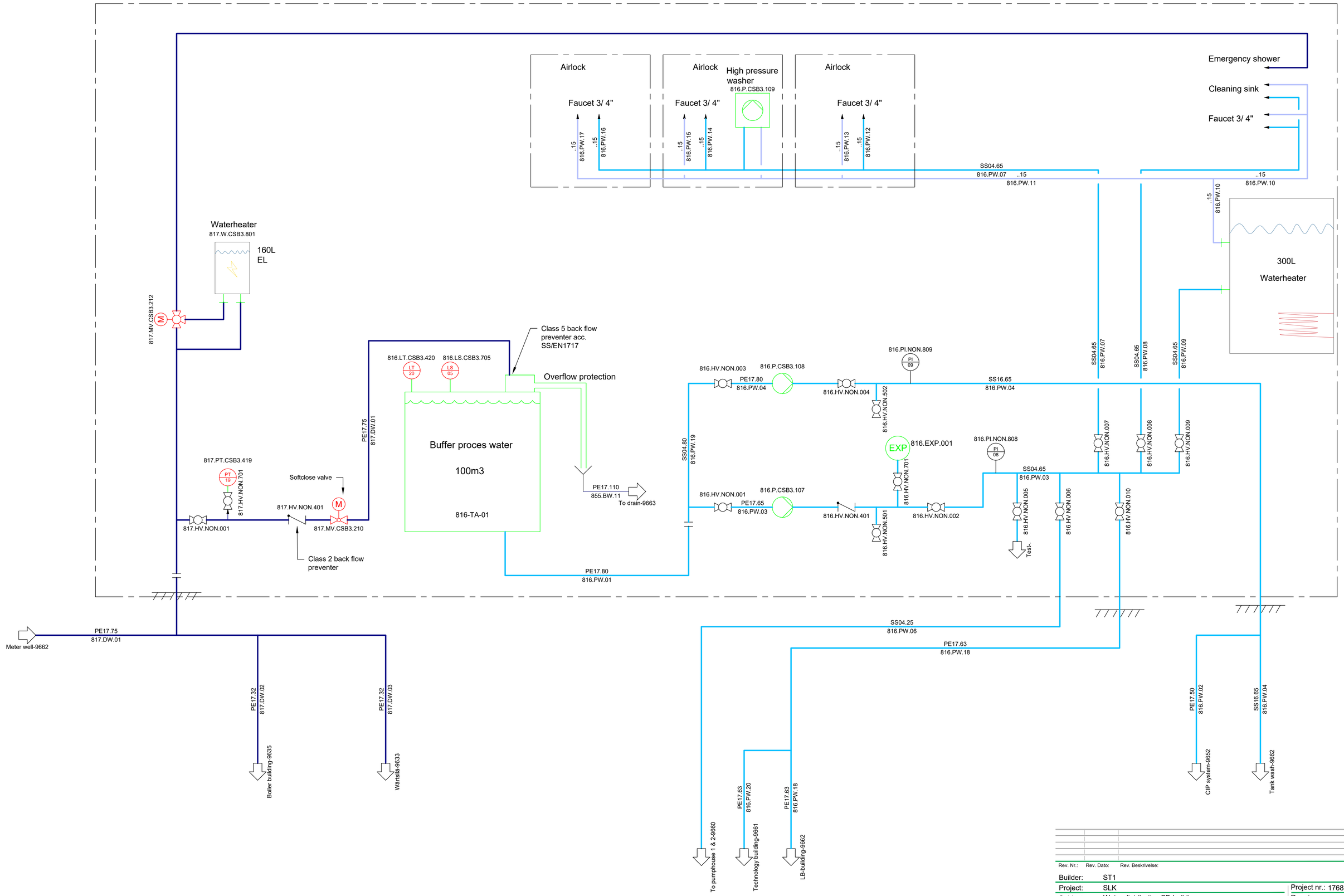

Rev. Nr.:	Rev. Dato:	Rev. Beskrivelse:

Builder: ST1
Project: SLK
Subject: Water distribution SB-building
Rev. 2

Int.:MDC | QC:CM | APP.: | Date: 26-06-2025

Project nr.: 1768
Drawing nr.: 9653

LUNDSBY RENEWABLE SOLUTIONS

Lundsby Biogas A/S, Hjarbækvej 65, 8831 Løgstrup
Tlf.: +45 96 49 43 00 Info@lundsbybiogas.dk

Denne tegning er underlagt copywrite op må ikke reproduceres uden tilladelse fra Lundsbybiogas A/S

FORMAT: A1

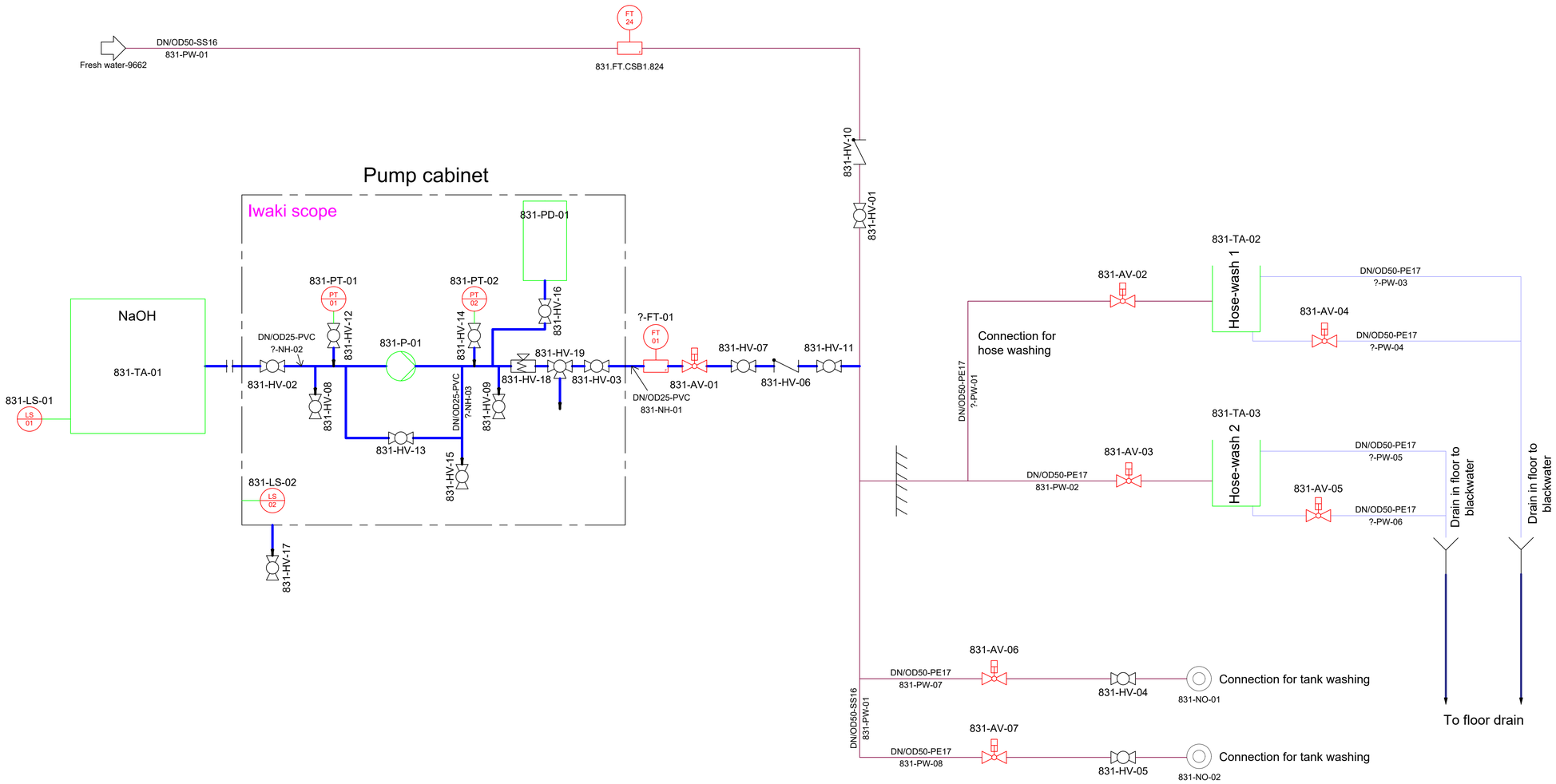

Rev. Nr.:	Rev. Dato:	Rev. Beskrivelse:

Builder: Gasum
Project: Borlänge biogas
Subject: Wash system
Rev. 2

Sags nr.: 1768
Tegn. nr.: 9653

Int.:MDC | QC: CM | APP.: | Date: 26-06-2025

LUNDSBY RENEWABLE SOLUTIONS
Lundsby Biogas A/S, Hjarbækvej 65, 8831 Løgstrup
Tlf.: +45 96 49 43 00 Info@lundsbybiogas.dk
Denne tegning er underlagt copywrite op må ikke reproduceres unden tilladelse fra Lundsbybiogas A/S

FORMAT: A1

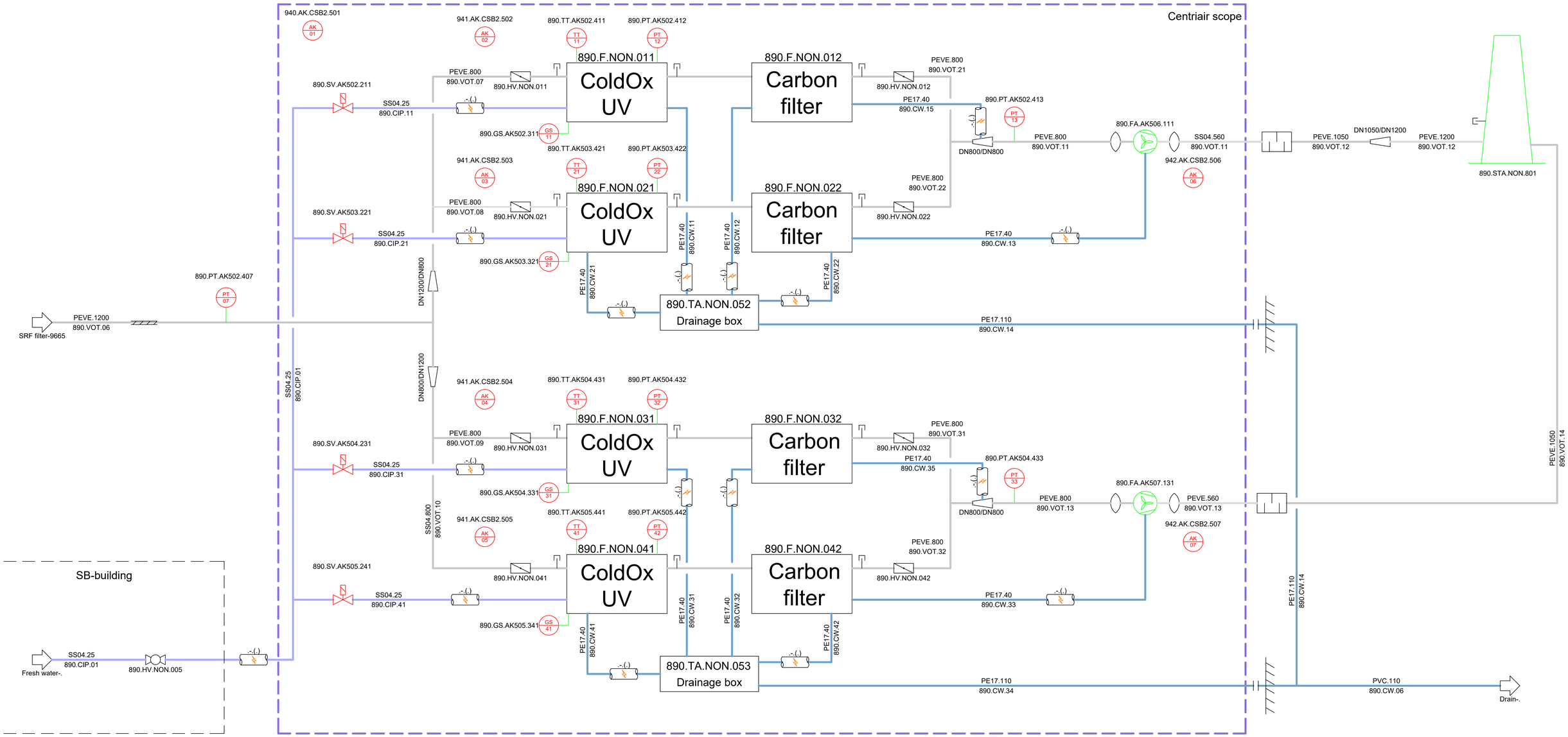

Rev. Nr.:	Rev. Dato:	Rev. Decription:

Builder:	ST1		
Project:	SLK		Project nr..1768
Subject:	Centriair UV reaktor Rev. 2		Drawing nr..: 9655
Int.: MDC	QC.CM	APP.:	Date: 26-06-2025

LUNDSBY RENEWABLE SOLUTIONS
Lundsby Renewable Solutions A/S, Hjarbækvej 65, 8831 Løgstrup
Tlf.: +45 96 49 43 00 Info@lundsby.dk
This Drawing is subject to copywrite and may not be reproduced without permission from Lundsby Renewable Solutions A/S

FORMAT: A1

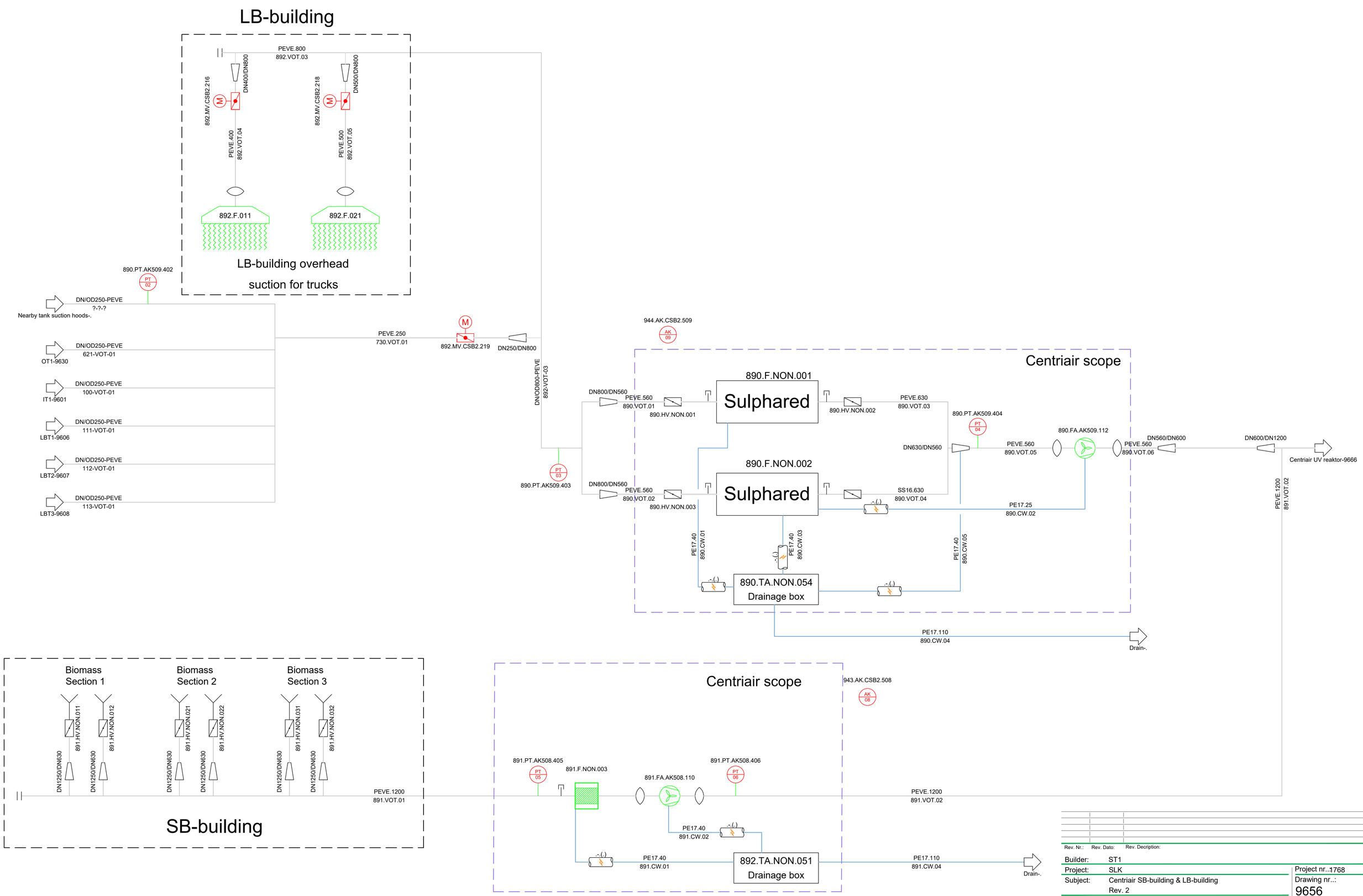

Rev. Nr.:	Rev. Dato:	Rev. Decription:

Builder:	ST1
Project:	SLK
Subject:	Centriair SB-building & LB-building Rev. 2
Int.: MDC	QC: CM · APP.: · Date: 26-06-2025

Project nr..: 1768

Drawing nr..:

9656

FORMAT: A1

LUNDSBY RENEWABLE SOLUTIONS

Lundsby Renewable Solutions A/S, Hjarbækvej 65, 8831 Løgstrup
Tlf.: +45 96 49 43 00 Info@lundsby.dk

This Drawing is subject to copywrite and may not be reproduced without permission from Lundsby Renewable Solutions A/S

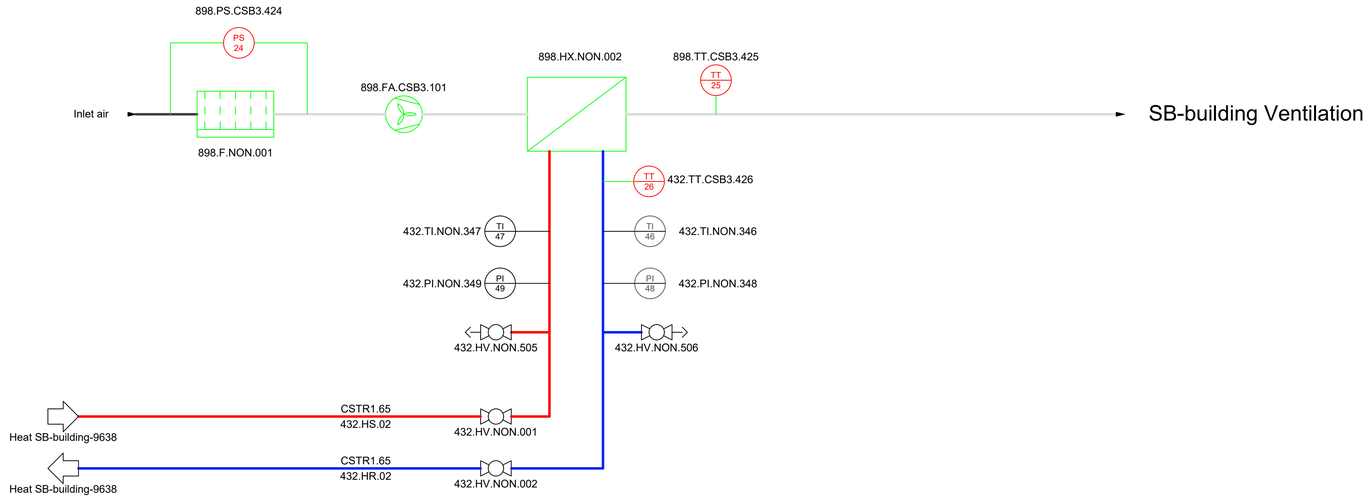

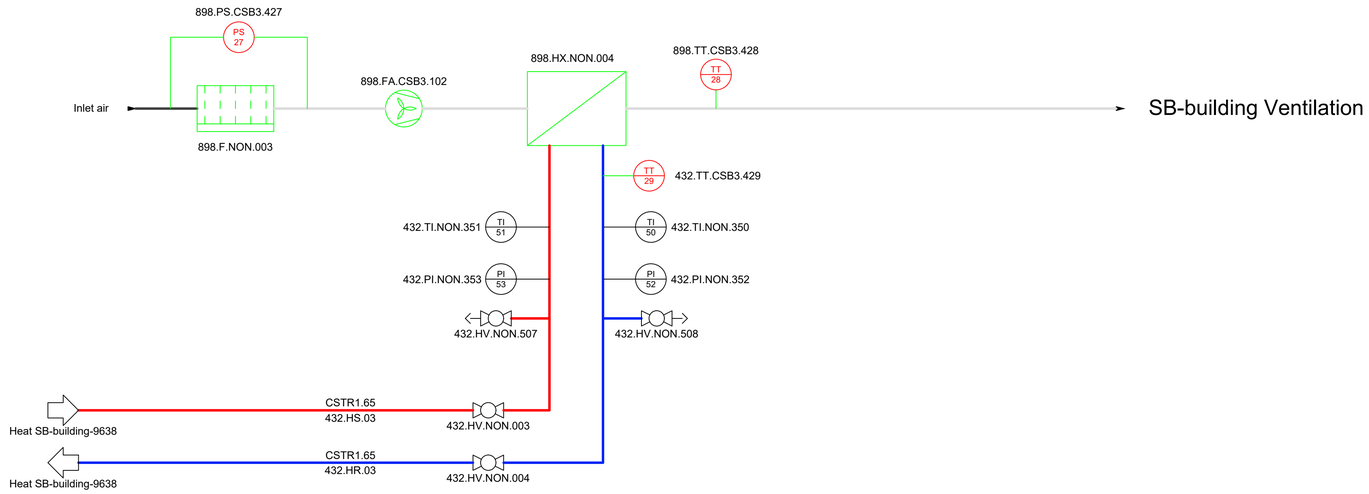

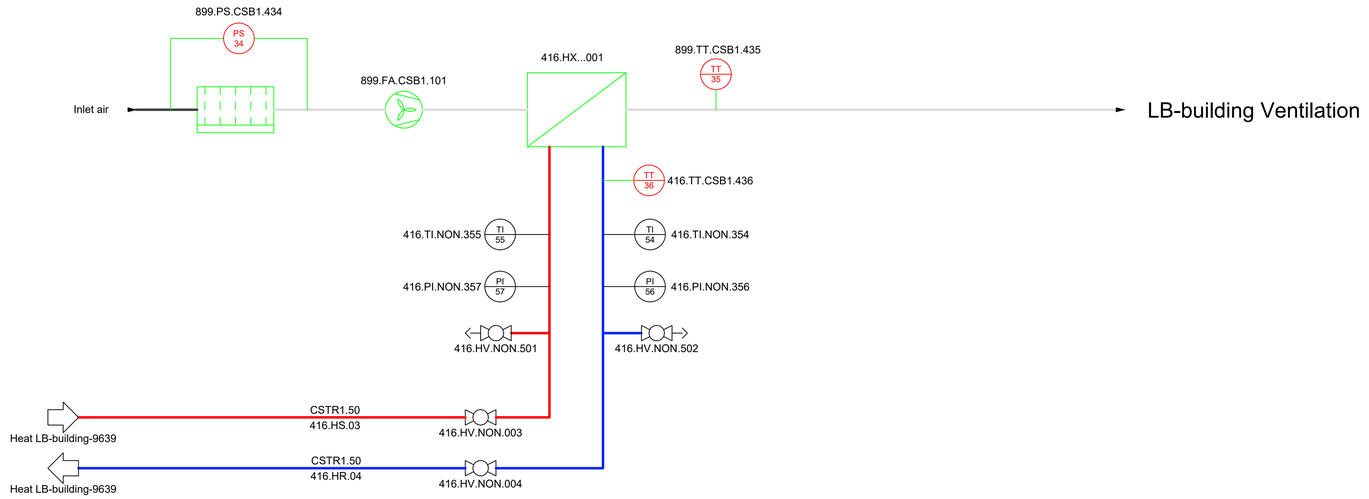

Rev. Nr.:	Rev. Dato:	Rev. Decription:

Builder: ST1

Project: SLK

Subject: Ventilation SB & LB building
Rev. 2

Int.: MDC | QC.: CM | APP.: | Date: 26-06-2025

Project nr..: 1768

Drawing nr..:
9657

FORMAT: A1

LUNDSBY RENEWABLE SOLUTIONS
Lundsby Renewable Solutions A/S, Hjarbækvej 65, 8831 Løgstrup
Tlf.: +45 96 49 43 00 Info@lundsby.dk
This Drawing is subject to copywrite and may not be reproduced without permission from Lundsby Renewable Solutions A/S

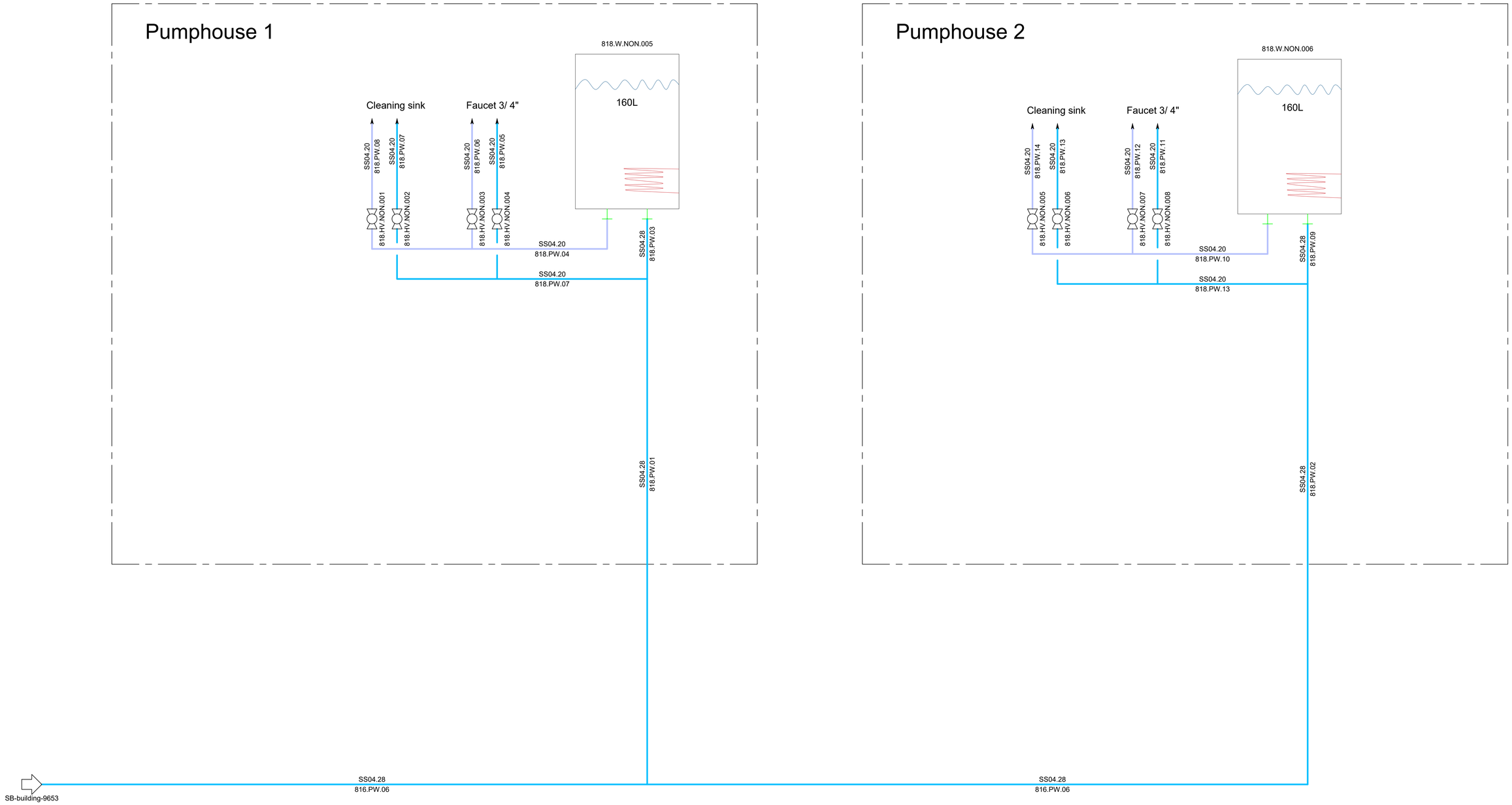

Rev. Nr.:	Rev. Dato:	Rev. Beskrivelse:

Builder: ST1

Project: SLK

Subject: Water distribution pumphouse 1 & 2
Rev. 2

Int.:MDC | QC:CM | APP.: | Date: 26-06-2025

Project nr.: 1768

Drawing nr.: 9660

FORMAT: A1

LUNDSBY RENEWABLE SOLUTIONS
Lundsby Biogas A/S, Hjarbækvej 65, 8831 Løgstrup
Tlf.: +45 96 49 43 00 Info@lundsbybiogas.dk
Denne tegning er underlagt copywrite op må ikke reproduceres unden tilladelse fra Lundsbybiogas A/S

Technology building

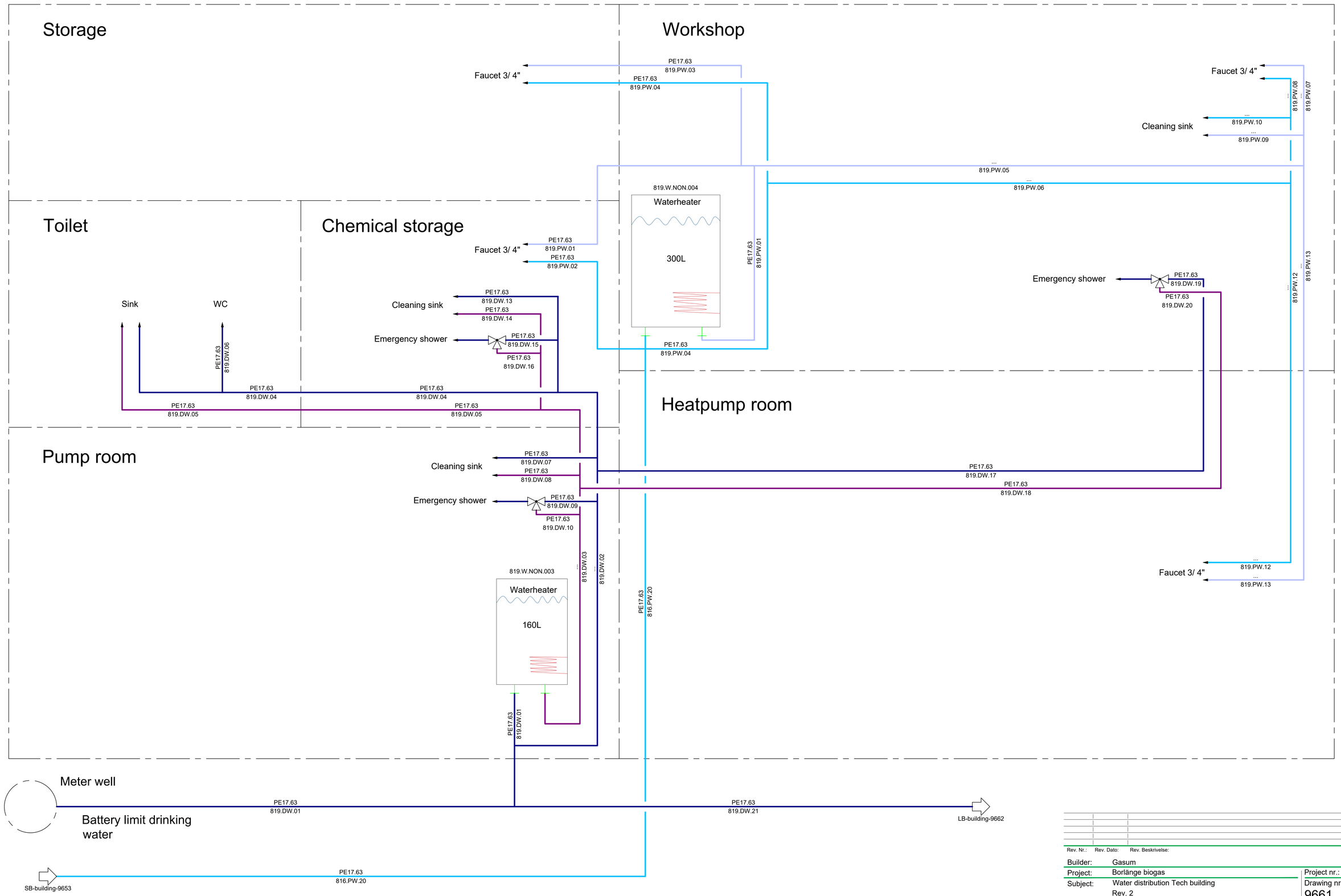

Rev. Nr.:	Rev. Dato:	Rev. Beskrivelse:

Builder:	Gasum		
Project:	Borlänge biogas		Project nr.: 1768
Subject:	Water distribution Tech building Rev. 2		Drawing nr.: 9661
Int.:MDC	QC:CM	APP.:	Date: 26-06-2025

LUNDSBY RENEWABLE SOLUTIONS
Lundsby Biogas A/S, Hjarbækvej 65, 8831 Løgstrup
Tlf.: +45 96 49 43 00 Info@lundsbybiogas.dk
Denne tegning er underlagt copywrite op må ikke reproduceres unden tilladelse fra Lundsbybiogas A/S

FORMAT: A1

LB-building

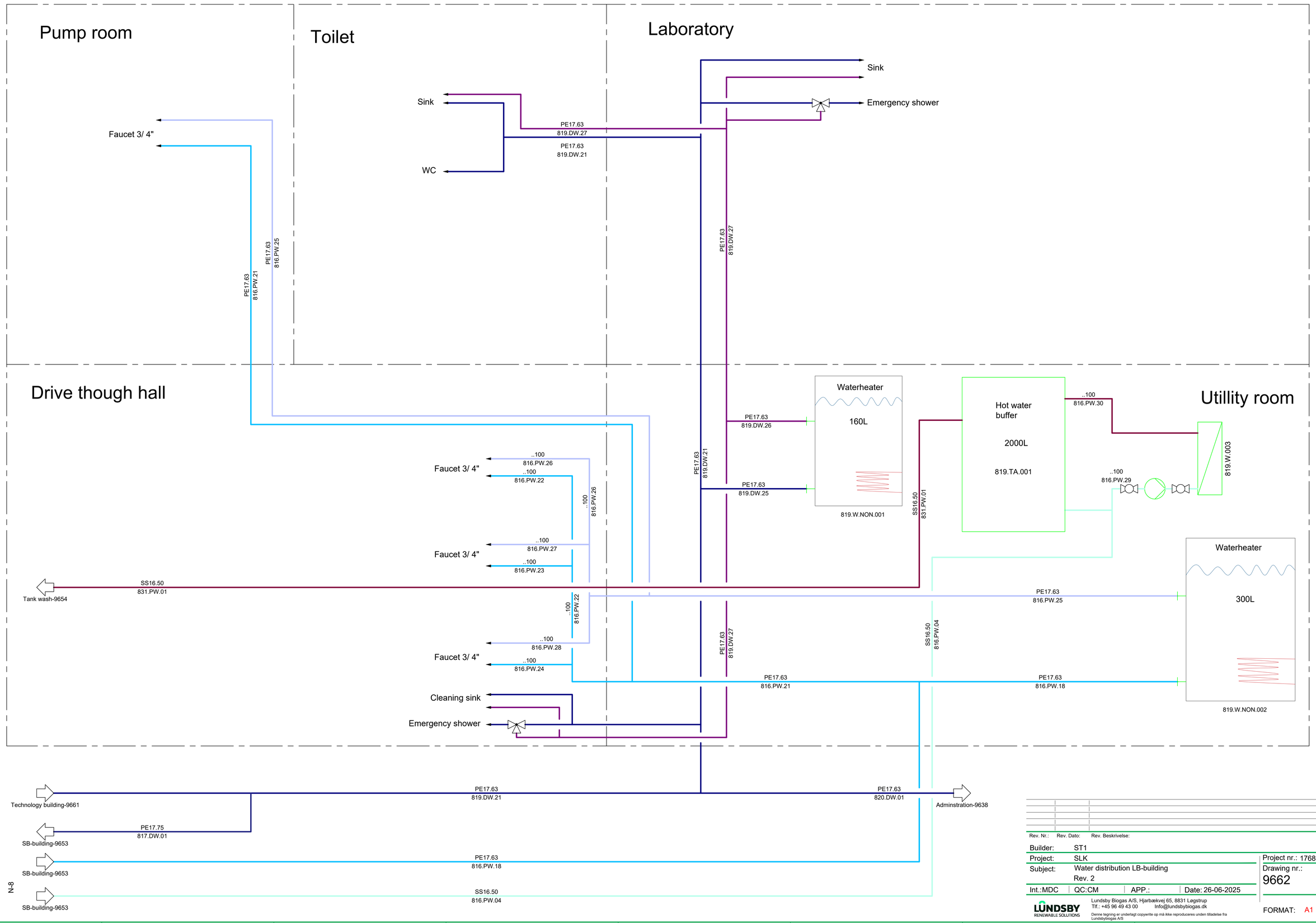

Rev. Nr.:	Rev. Dato:	Rev. Beskrivelse:

Builder:	ST1		
Project:	SLK		Project nr.: 1768
Subject:	Water distribution LB-building Rev. 2		Drawing nr.: 9662
Int.:MDC	QC:CM	APP.:	Date: 26-06-2025

LUNDSBY RENEWABLE SOLUTIONS
Lundsby Biogas A/S, Hjarbækvej 65, 8831 Løgstrup
Tlf.: +45 96 49 43 00 Info@lundsbybiogas.dk
Denne tegning er underlagt copywrite op må ikke reproduceres uden tilladelse fra Lundsbybiogas A/S

FORMAT: A1

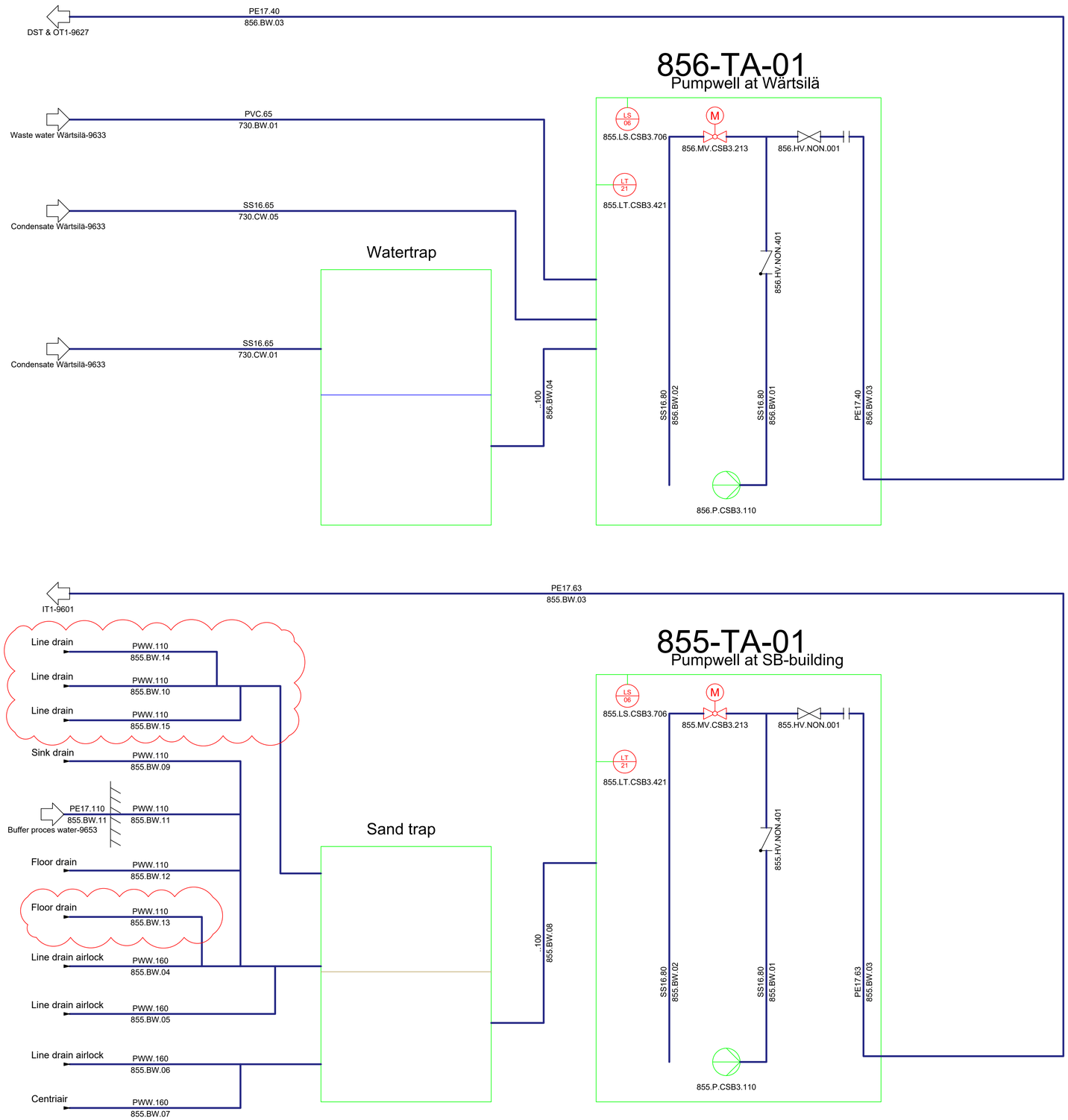

N-3

Rev. Nr.:	Rev. Dato:	Rev. Decription:

Builder: ST1

Project: SLK

Subject: Blackwater well SB-building & Wärtsilä
Rev. 2

Int.: MDC | QC.CM | APP.: | Date: 26-06-2025

Project nr..: 1768

Drawing nr..: 9640

LUNDSBY RENEWABLE SOLUTIONS
Lundsby Renewable Solutions A/S, Hjarbækvej 65, 8831 Løgstrup
Tlf.: +45 96 49 43 00 Info@lundsby.dk
This Drawing is subject to copywrite and may not be reproduced without permission from Lundsby Renewable Solutions A/S

FORMAT: A1

Anti foam system

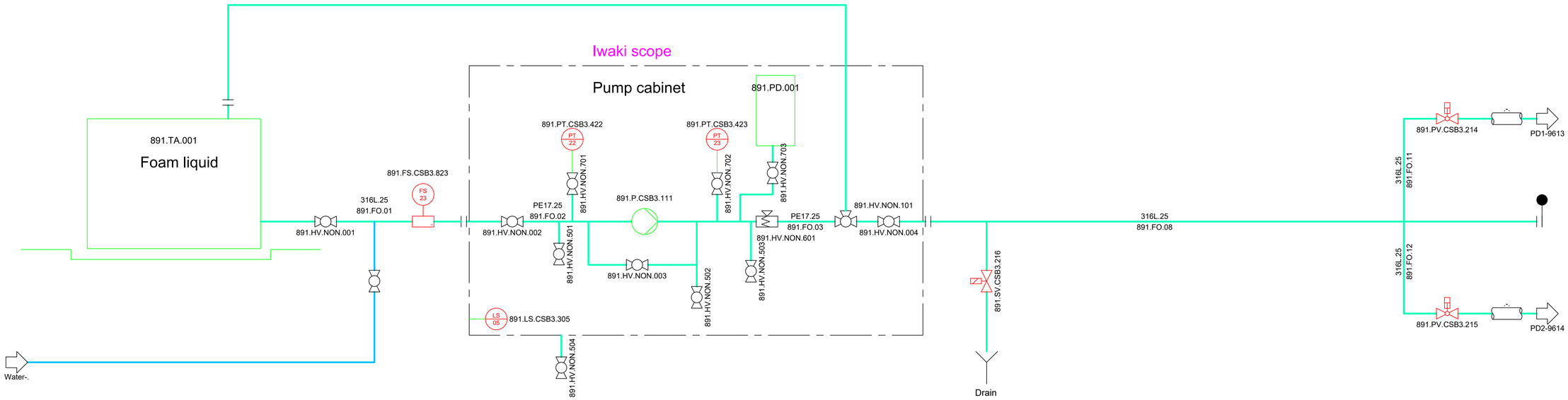

Rev. Nr.:	Rev. Dato:	Rev. Decription:

Builder: ST1

Project: SLK

Subject: Anti foam system
Rev. 2

Int.: MDC | QC.CM | APP.: | Date: 26-06-2025

Project nr..1768

Drawing nr..:
9664

FORMAT: A1

LUNDSBY RENEWABLE SOLUTIONS
Lundsby Renewable Solutions A/S, Hjarbækvej 65, 8831 Løgstrup
Tlf.: +45 96 49 43 00 Info@lundsby.dk
This Drawing is subject to copywrite and may not be reproduced without permission from Lundsby Renewable Solutions A/S